CDR Mini System

MC-77/21/21M/22/37

Service
Service
Service

Service Manual

Table of Contents

Technical specification 1-2
Measurement setup 1-3
Warnings & Safety 1-4
Service Hints 2-1
Location of printed circuit boards 2-2
Brief Operating Instructions
Dismantling Instructions 3-1
Service Testprogram 3-4
Wiring Diagram 4-1
Blockdiagram 5-1

Front Display Board 6

Tuner Board 7

Front Control Board 8
STANDBY (POWER) PART 8-1
KEY CONTROL (KEYB. 1) & LIGHTWASH PARTS 8-2
HEADPHONE, JOG (VOLUME) AND CDC KEY PARTS 8-3

Electronic Tape Function ETF8 9

3 Disc Tray Changer Module 10

Power Module 11

Exploded view of set 12
Partslist of set 12

CLASS 1
LASER PRODUCT

© Copyright 2002 Philips Consumer Electronics B.V. Eindhoven, The Netherlands
All rights reserved. No part of this publication may be reproduced, stored in a retrieval system or transmitted, in any form or by any means, electronic, mechanical, photocopying, or otherwise without the prior permission of Philips.

Published by HB 0218 Service Audio Printed in The Netherlands Subject to modification

GB 3103 785 25160

PHILIPS

Technical Specification

General:

Mains voltage	: 120 / 240V switchable (for /21)
	: 230V (for /22)
	: 120V (for /37)
Mains frequency	: 50 ~ 60Hz
Power consumption	: 43W at 1/8 P_{RATED}
	: 185W at max output
	: ≤10W at Stand by
	: ≤1W at ECO Stand by
Clock accuracy	: ≤4 seconds per day

Tuner:

FM

Tuning range	: 87.5MHz - 108MHz
Grid	: 50 kHz, 100kHz for /37
IF	: 10.7MHz
Aerial input	: 75Ω coaxial
	: 300Ω click fit for /37
Sensitivity Mono (26dB S/N)	: < 22dBf (typ. 16dBf)
d (RF=1mV,Δf=75kHz)	: < 3% (typ. 1%)
IF rejection	: > 60dB
Image rejection	: > 25dB
-3dB Limiting Point	: < 23.5dBf (typ. 15dBf)

MW

Tuning range	: 531kHz - 1062kHz
Grid	: 9kHz, 10kHz for /37
IF	: 450kHz ±1kHz
Sensitivity at 26dB S/N	: < 4400µV/m
d (RF=50mV,m=80%)	: < 5% - typ. 3%
IF rejection	: > 45dB
Image rejection	: > 28dB

LW

Tuning range	: 153kHz - 279kHz
Grid	: 3kHz
IF	: 450kHz ±1kHz
Sensitivity at 26dB S/N	: < 7000µV/m
d (RF=50mV,m=80%)	: < 5% - typ. 3%
IF rejection	: > 35dB
Image rejection	: > 30dB

Amplifier:

Output power	: 2 x 75W at 6Ω (2x70W FTC)
Headphone	: 2,5V at 100kΩ
Frequency response	: 20Hz - 20kHz (-3dB) Limit
Equalizer	: Digital Sound Control

Input sensitivity

Aux/Line	: 500mV ±2dB
Microphone	: 2.5mV ±2dB at 1kHz

CD unit:

Measured at the output of the 3DTC Module.

Frequency response within	: 20Hz - 20kHz at ±1dB
Signal/Noise ratio	: > 80dB (A-weighted)
Distortion at 1kHz,0dB	: <0.02%
Channel unbalance	: < 1dB
Channel crosstalk at 1kHz	: -60dB
De-emphasis	: 0 or 15/50 µS

Laser

Output power	: ≤500µW
Wave length	: 780nm ±20nm

Cassette recorder:

Tape speed	: 4.76cm/s
Wow and flutter	: < 0.4%
Wind/rewind (C60)	: < 130s
Tape	: IEC I, IEC II
Bias system	: AC, 78kHz ±10kHz
Erase attenuation	: > 60dB at IEC I
Frequency response	: 80Hz - 12500Hz within 8dB
Signal/Noise ratio	: > 48dB (A-weighted)
Distortion at 1kHz,250nW/m	: < 5%
Channel unbalance	: < 4dB
Channel crosstalk at 1kHz	: -18dB
ALC attack time	: < 25ms
ALC recovey time	: >40s

Measurement Setup

Tuner FM

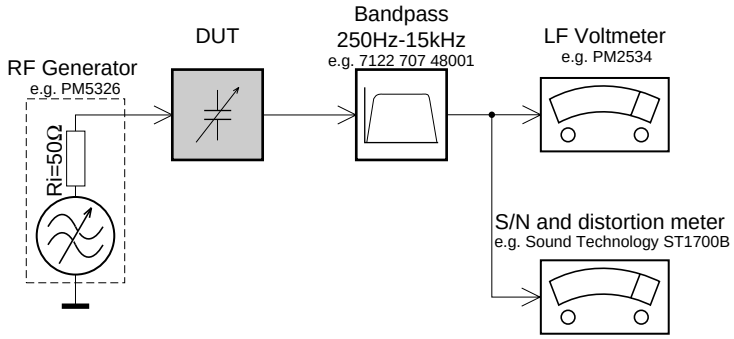

Use a bandpass filter to eliminate hum (50Hz, 100Hz) and disturbance from the pilottone (19kHz, 38kHz).

Tuner AM (MW,LW)

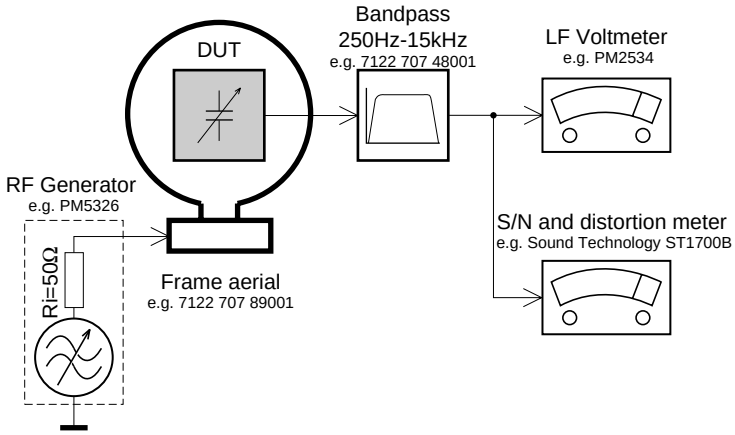

To avoid atmospheric interference all AM-measurements have to be carried out in a Faraday´s cage.

CD

Use Audio Signal Disc SBC429 4822 397 30184
(replaces test disc 3)

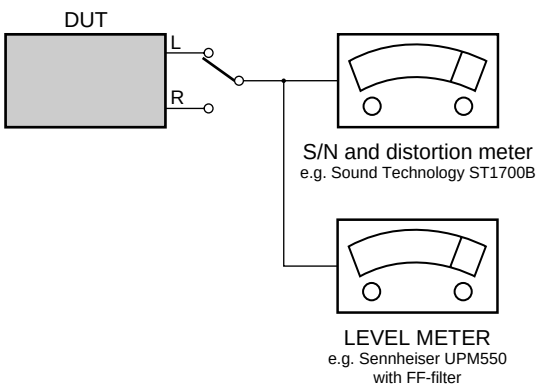

RECORDER

Use Universal Test Cassette **CrO_2** SBC419 4822 397 30069
or Universal Test Cassette **Fe** SBC420 4822 397 30071

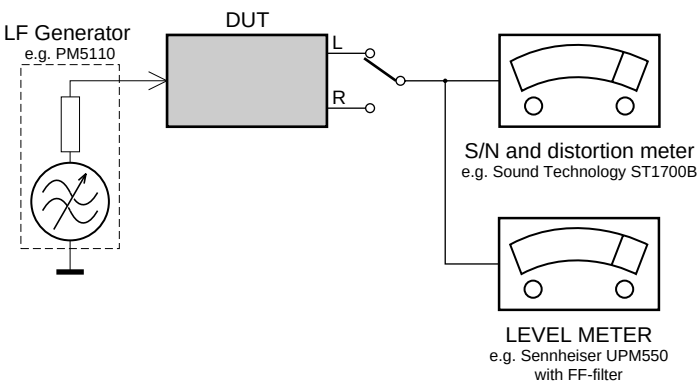

Warnings & Safety

ESD

(GB) WARNING
All ICs and many other semiconductors are susceptible to electrostatic discharges (ESD). Careless handling during repair can reduce life drastically.
When repairing, make sure that you are connected with the same potential as the mass of the set via a wristband with resistance. Keep components and tools at this potential.

(F) ATTENTION
Tous les IC et beaucoup d´autres semi-conducteurs sont sensibles aux décharges statiques (ESD). Leur longévite pourrait être considérablement écourtée par le fait qu´aucune précaution nést prise à leur manipulation.
Lors de réparations, s´assurer de bien être relié au même potentiel que la masse de l´appareil et enfileer le bracelet serti d´une résistance de sécurité.
Veiller à ce que les composants ainsi que les outils que l´on utilise soient également à ce potentiel.

(D) WARNUNG
Alle ICs und viele andere Halbleiter sind empfindlich gegenüber elektrostatischen Entladungen (ESD).
Unsorgfältige Behandlung im Reparaturfall kann die Lebensdauer drastisch reduzieren.
Sorgen Sie dafür, daß Sie im Reparaturfall über ein Pulsarmband mit Widerstand mit dem Massepotential des Gerätes verbunden sind.
Halten Sie Bauteile und Hilfsmittel ebenfalls auf diesem Potential.

(NL) WAARSCHUWING
Alle IC´s en vele andere halfgeleiders zijn gevoelig voor electrostatische ontladingen (ESD).
Onzorgvuldig behandelen tijdens reparatie kan de levensduur drastisch doen vermindern. Zorg ervoor dat u tijdens reparatie via een polsband met weerstand verbonden bent met hetzelfde potentiaal als de massa van het apparaat.
Houd componenten en hulpmiddelen ook op ditzelfde potentiaal.

(I) AVVERTIMENTO
Tutti IC e parecchi semi-conduttori sono sensibili alle scariche statiche (ESD).
La loro longevità potrebbe essere fortemente ridatta in caso di non osservazione della più grande cauzione alla loro manipolazione. Durante le riparationi occorre quindi essere collegato allo stesso potenziale che quello della massa delápparecchio tramite un braccialetto a resistenza.
Assicurarsi che i componenti e anche gli utensili con quali si lavora siano anche a questo potenziale.

(GB) AVAILABLE ESD PROTECTION EQUIPMENT :

anti-static table mat	large 1200x650x1.25mm	4822 466 10953
	small 600x650x1.25mm	4822 466 10958
anti-static wristband		4822 395 10223
connection box (3 press stud connections, 1MΩ)		4822 320 11307
extendible cable (2m, 2MΩ, to connect wristband to connection box)		4822 320 11305
connecting cable (3m, 2MΩ, to connect table mat to connection box)		4822 320 11306
earth cable (1MΩ, to connect any product to mat or to connection box)		4822 320 11308
KIT ESD3 (combining all 6 prior products - small table mat)		4822 310 10671
wristband tester		4822 344 13999

SAFETY

(GB)
Safety regulations require that the set be restored to its original condition and that parts which are identical with those specified be used.
Safety components are marked by the symbol ⚠

(F)
Les normes de sécurité exigent que l`appareil soit remis à l`état d`origine et que soient utilisées les pièces de rechange identiques à celles spécifiées.
Les composants de sécurité sont marqués ⚠

(D)
Bei jeder Reparatur sind die geltenden Sicherheitsvorschriften zu beachten. Der Originalzustand des Gerätes darf nicht verändert werden. Für Reparaturen sind Originalersatzteile zu verwenden.
Sicherheitsbauteile sind durch das Symbol ⚠ markiert.

(NL)
Veiligheidsbepalingen vereisen, dat het apparaat in zijn oorspronkeliijke toestand wordt teruggebracht en dat onderdelen, identiek aan de gespecificeerde, worden toegepast.
De Veiligheidsonderdelen zijn aangeduid met het symbool ⚠

(I)
Le norme di sicurezza estigono che l´apparecchio venga rimesso nelle condizioni originali e che siano utilizzati i pezzi di ricambiago identici a quelli specificati.
Componenty di sicurezza sono marcati con ⚠

(GB) **DANGER**: Invisible laser radiation when open. AVOID DIRECT EXPOSURE TO BEAM.

CLASS 1
LASER PRODUCT

(S) Varning !
Osynlig laserstrålning när apparaten är öppnad och spärren är urkopplad. Betrakta ej strålen.

(DK) Advarsel !
Usynlig laserstråling ved åbning når sikkerhedsafbrydere er ude af funktion. Undgå udsaettelse for stråling.

(FIN) Varoitus !
Avatussa laitteessa ja suojalukituksen ohitettaessa olet alttiina näkymättömälle laserisäteilylle. Älä katso säteeseen !

(GB)
After servicing and before returning the set to customer perform a leakage current measurement test from all exposed metal parts to earth ground, to assure no shock hazard exists.
The leakage current must not exceed 0.5mA.

(F)
"Pour votre sécurite, ces documents doivent être utilisés par des spécialistes agréés, seuls habilités à réparer votre appareil en panne".

Service hints

Handling chip components

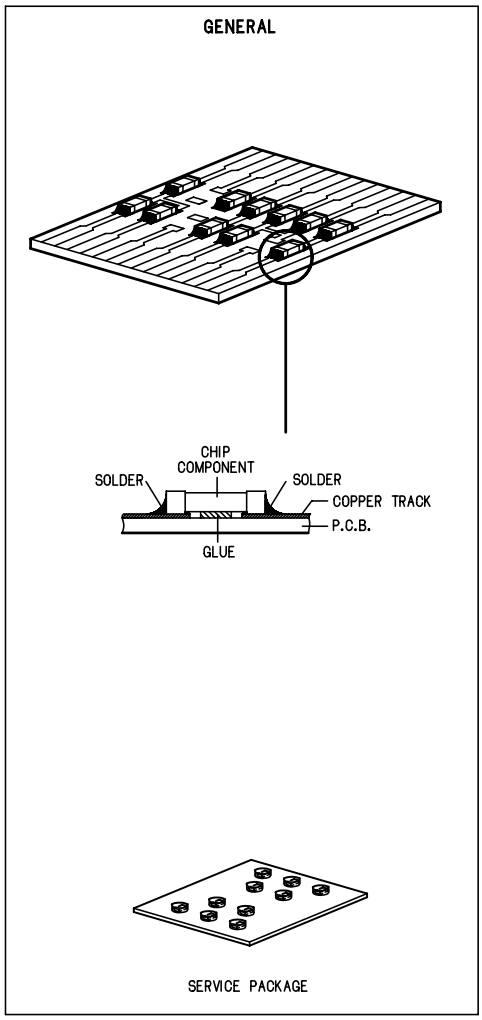

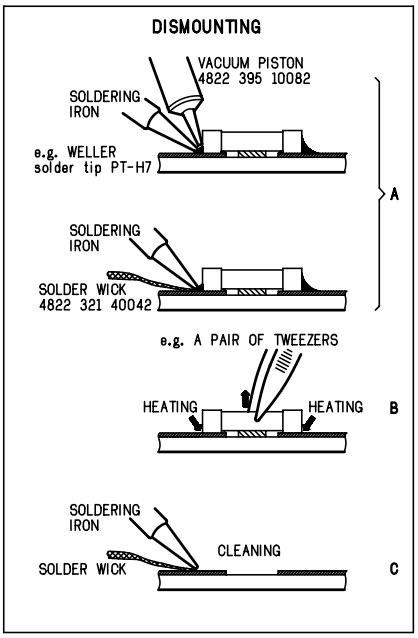

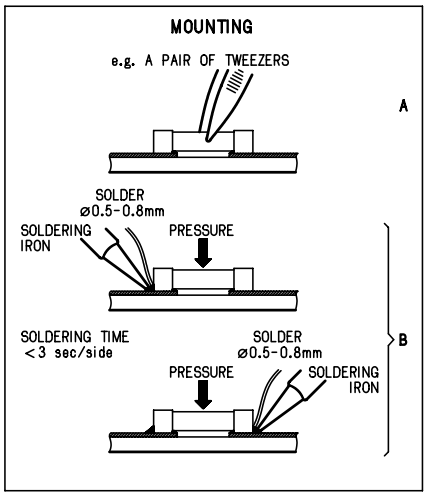

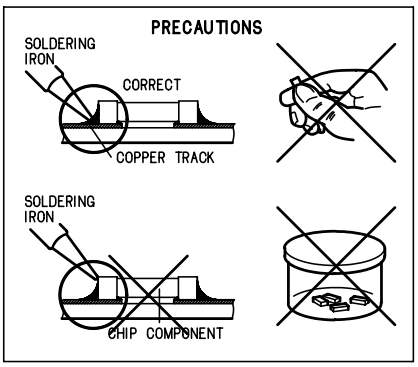

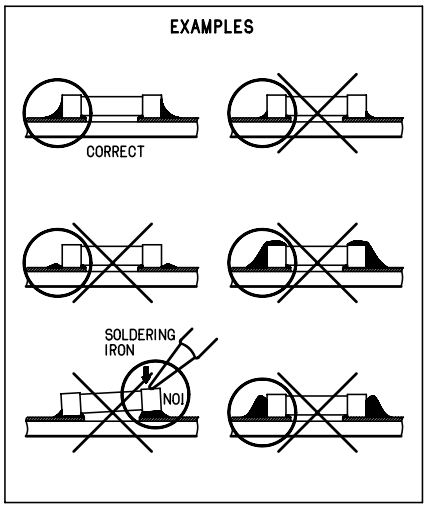

Service Tools

TORX T10 screwdriver with shaftlength 150mm 4822 395 50423
TORX screwdriver set SBC 163 .....4822 295 50145

Audio signal disc SBC 429.....4822 397 30184
Playability test disc SBC444 .....4822 397 30245
Test disc 5 (disc without errors) +
Test disc 5A (disc with dropout errors, black spots and fingerprints)
SBC 426/426A 4822 397 30096
Burn in test disc (65 min. 1kHz signal at -30dB level without "pause") ...4822 397 30155

SBC420 Test cassette Fe.....4822 397 30071
SBC419 Test cassette CrO_2.....4822 397 30069

Escape from „Demo Mode“

The demo mode displays various features of the set and will start automatically.
Press and hold DEMO STOP on the system until "DEMO OFF OFF" is displayed. The system will switch to Standby mode.
Note: Even if you remove the AC power cord and reconnect it to the wall socket, the demonstration will remain off until you activate it again.

Location of Printed Circuit Boards

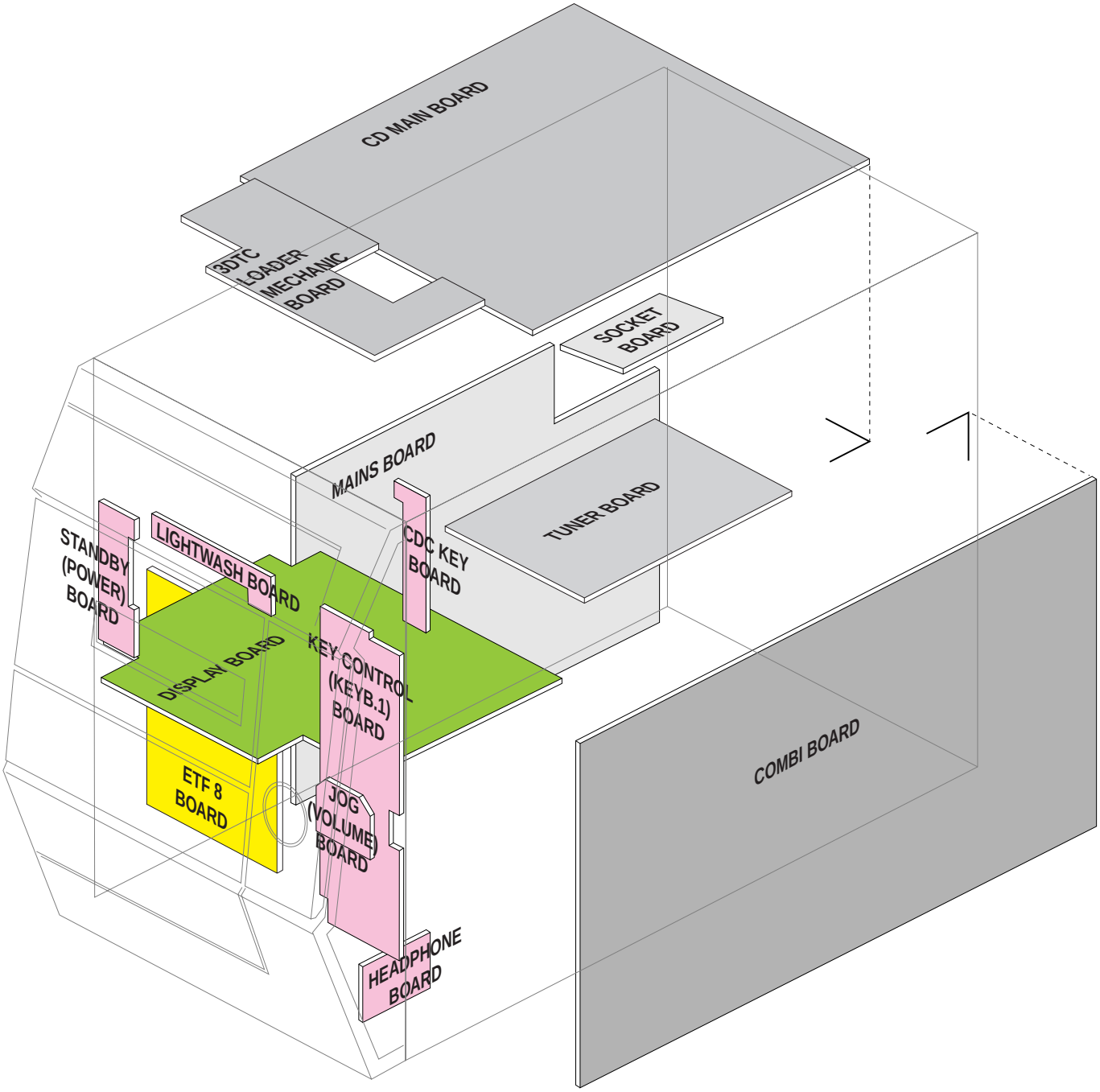

Attention:
Lightwash, CDC-key board, standby board and headphone board are part of the **Front Control Board**.
For details see chapter 8

Brief Operating Instruction

The following excerpt of the Owners Manual serves as a very short introduction to the set.
The complete Owners Manual can be downloaded in several languages from the Internet site of Philips Customer Care Center: **www.p4c.philips.com**

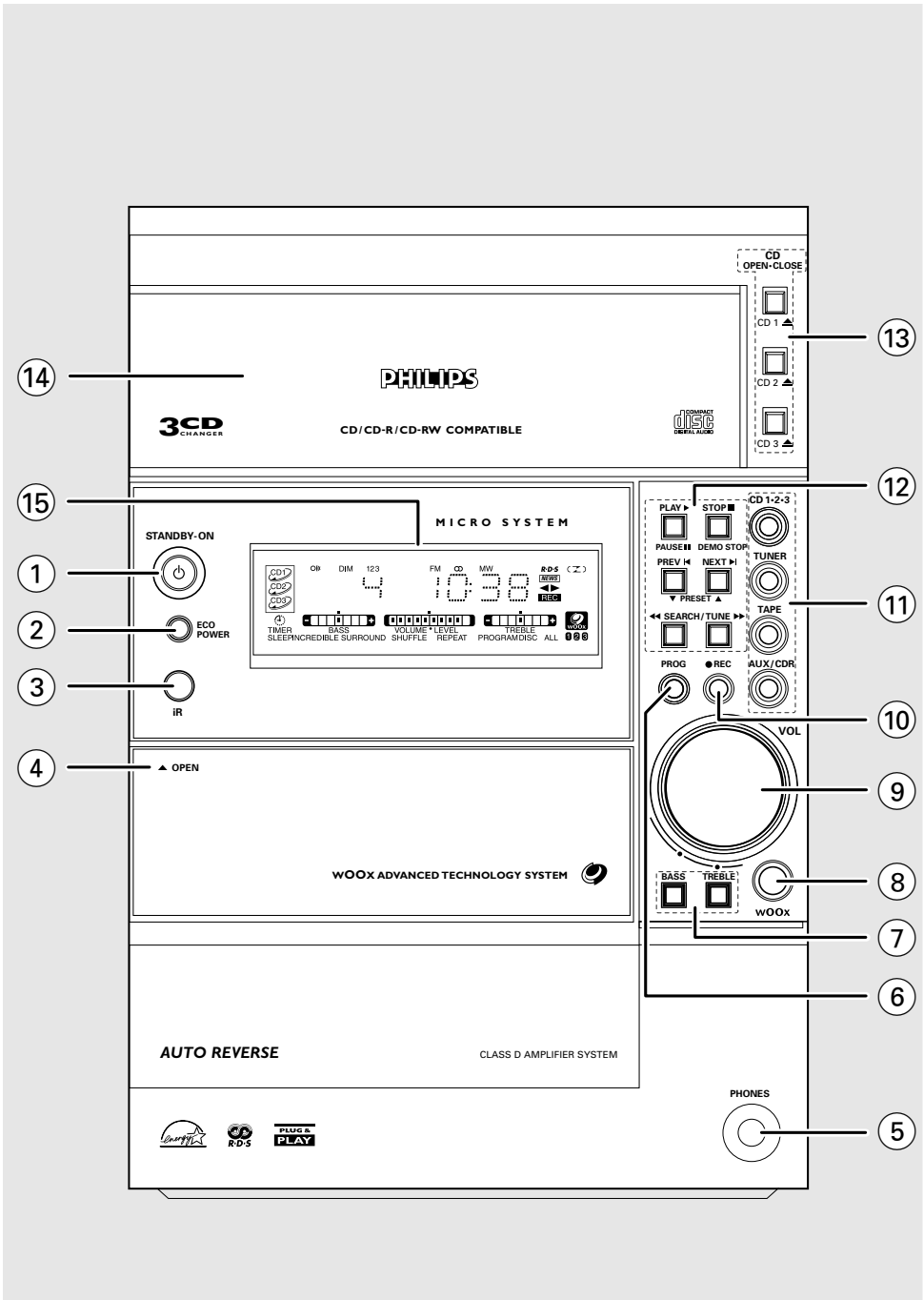

Controls on the system and remote control

① **STANDBY ON** ⏻
– to switch the system on or to Standby mode.

② **ECO POWER**
– to switch the system on or to Eco Power Standby mode.

③ **iR**
– infrared sensor for remote control.

④ ▲ **OPEN**
– to open the tape deck door.

⑤ **PHONES**
– to connect headphones.

⑥ **PROG (PROGRAM)**
for CD ..... to programme disc tracks.
for TUNER ..... to programme preset radio stations.
for CLOCK ..... to select 12- or 24-hour clock mode.

⑦ **BASS/TREBLE**
– to select BASS or TREBLE sound feature.
BASS/TREBLE ＋/－ *(on the remote control)*
– to increase or decrease the low or high tone level for the respective BASS or TREBLE sound feature selected.

⑧ **wOOx**
– *(on the system only)* to select the next wOOx level or switch off wOOx sound effect.
– *(on the remote control only)* to switch on or off the wOOx sound effect.
wOOx LEVEL
– *(on the remote control only)* to select a desired wOOx level : WOOX 1, WOOX 2 or WOOX 3.

⑨ **VOL (VOLUME ＋/－)**
– to increase or decrease the volume.
– *(on the system only)* to increase or decrease the low or high tone level for the respective BASS or TREBLE sound feature selected.

⑩ ● **REC**
– to start recording on a tape.

⑪ **SOURCE** – to select the following:
CD 1•2•3 (CD 123)
– to select disc tray 1, 2 or 3.
TUNER
– to select waveband : FM, MW or LW.
TAPE
– to select tape mode.
AUX / CDR
– to select a connected external source : CDR or AUX (auxiliary) mode.

⑫ **Mode Selection**
PLAY PAUSE ▶II
for CD ..... to start or interrupt playback.
for TAPE ..... to start playback.
for PLUG & PLAY…*(on the system only)* to initiate and start plug & play mode.
STOP/DEMO STOP ■
for CD ..... to stop playback or to clear a programme.
for TUNER ..... to stop programming.
..... *(on the system only)* to delete the preset radio station.
for TAPE ..... to stop playback or recording.
for DEMO ..... *(on the system only)* to activate/ deactivate the demonstration.
for CLOCK ..... to exit clock setting or cancel timer.
for PLUG & PLAY…*(on the system only)* to exit plug & play mode.
PREV / NEXT ⏮ ⏭ (PRESET ▼▲)
for CD ..... to skip to the beginning of the current, previous, or next track.
for TUNER ..... to select a preset radio station.
for TAPE ..... to select tape side (back or front).
for CLOCK ..... to set the minute.
SEARCH / TUNE ◀◀ ▶▶
for CD ..... to search backward/forward.
for TUNER ..... to tune to a lower or higher radio frequency.
for TAPE ..... to rewind or fast forward.
for CLOCK ..... to set the hour.

⑬ **CD OPEN•CLOSE (CD 1/CD 2/CD 3)** ⏏
– to open or close the individual disc tray : CD 1, CD 2 or CD 3

⑭ **Disc trays**

⑮ **Display screen**
– to view the current status of the system.

⑯ **MUTE**
– to interrupt or resume sound reproduction.

⑰ **CD DIRECT 1/2/3**
– to select a disc tray for playback.

⑱ **IS (INCREDIBLE SURROUND)**
– to activate or deactivate the surround sound effect.

⑲ **DIM**
– to select various dim mode : DIM 1, DIM 2, DIM 3 or DIM OFF.

⑳ **AUTO REV. (AUTO REVERSE)**
– to select the desired tape playback modes.

㉑ **TIMER**
– to display timer or set the timer.

㉒ **REPEAT**
– to playback track(s)/disc(s)/programme repeatedly.

㉓ **SHUFFLE**
– to playback all available discs and their tracks/ programme in random order.

㉔ **TIMER ON/OFF**
– to activate or deactivate the timer function.

㉕ **NEWS**
– to hear News automatically.

㉖ **SLEEP**
– to activate, deactivate or set the sleep timer function.

㉗ **RDS**
– to select RDS information.

㉘ **CLOCK**
– to display clock or set the clock.

㉙ ⏻
– to switch the system to Eco Power Standby mode.

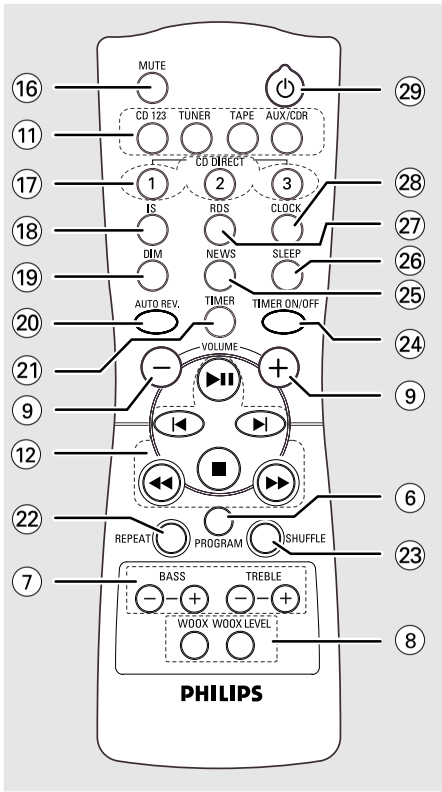

Notes for remote control:
– First, select the source you wish to control by pressing one of the source select keys on the remote control (CD 123 or TUNER, for example).
– Then select the desired function (▶, ⏮, ⏭, for example).

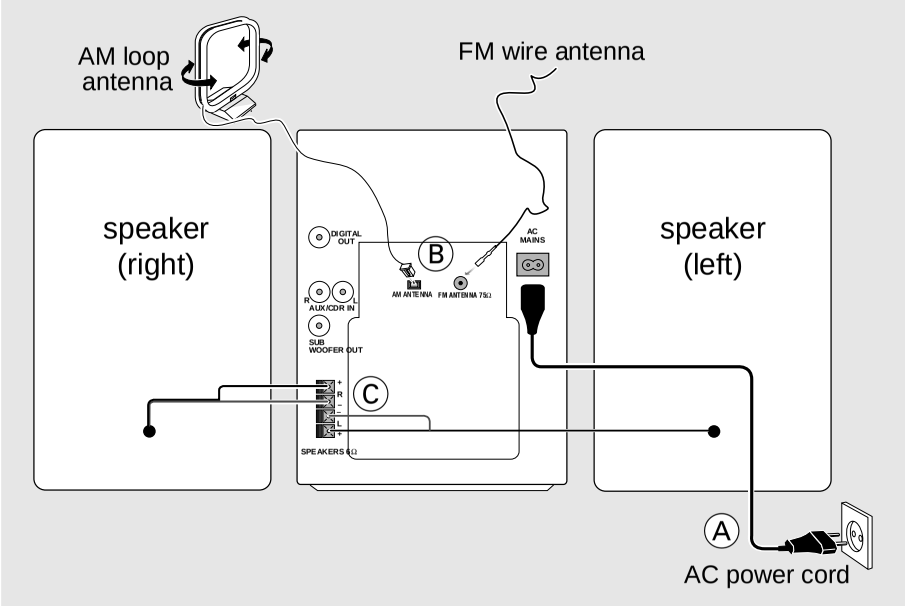

Rear connections

The type plate is located at the rear of the system.
For users in the U.K.: please follow the instructions on page 2.

Ⓐ Power

Before connecting the AC power cord to the wall outlet, ensure that all other connections have been made.

WARNING!
– For optimal performance, use only the original power cable.
– Never make or change connections with the power switched on.

To avoid overheating of the system, a safety circuit has been built in. Therefore, your system may switch to Standby mode automatically under extreme conditions. If this happens, let the system cool down before reusing it.

Ⓑ Antennas Connection

Connect the supplied AM loop antenna and FM antenna to the respective terminals. Adjust the position of the antenna for optimal reception.

AM Antenna

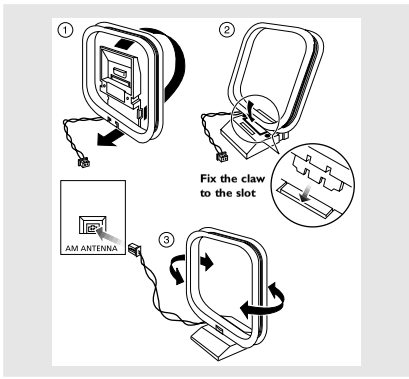

- Position the antenna as far as possible from a TV, VCR or other radiation source.

FM Antenna

- For better FM stereo reception, connect an outdoor FM antenna to the FM ANTENNA terminal.

Ⓒ Speakers Connection

Front Speakers

Connect the speaker wires to the SPEAKERS (FRONT) terminals, right speaker to "**R**" and left speaker to "**L**", coloured (marked) wire to "**+**" and black (unmarked) wire to "**–**".

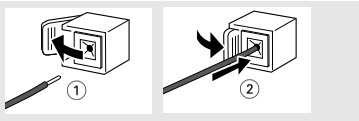

- Fully insert the stripped portion of the speaker wire into the terminal as shown.

Notes:
– For optimal sound performance, use the supplied speakers.
– Do not connect more than one speaker to any one pair of + / – speaker terminals.
– Do not connect speakers with an impedance lower than the speakers supplied. Please refer to the SPECIFICATIONS section of this manual.

Optional connections

The optional equipment and connecting cords are not supplied. Refer to the operating instructions of the connected equipment for details.

Subwoofer Out connection

Connect the subwoofer to the **SUBWOOFER OUT** terminal. The subwoofer reproduces just the low bass sound effect (explosions or the rumble of spaceships, for example).

Connecting other equipment to your system

Connect the audio left and right OUT terminals of a TV, VCR, Laser Disc player, DVD player or CD Recorder to the **AUX/CDR IN** terminals.

Note:
– If you are connecting equipment with a monaural output (a single audio out terminal), connect it to the AUX/CDR IN left terminal. Alternatively, you can use a "single to double" cinch cable (still be monaural sound).

Digital Out connection

Connect this digital output when recording on any audio equipment with digital input (CD Recorder, Digital Audio Tape [DAT] deck, Digital to Analogue Converter and Digital Signal Processor, for example). Use a cinch cable to connect the **DIGITAL OUT** terminal to the digital input terminal of the equipment.

Inserting batteries into the remote control

Insert two batteries (Type R06 or AA) into the remote control with the correct polarity as indicated by the + and – symbols inside the battery compartment.

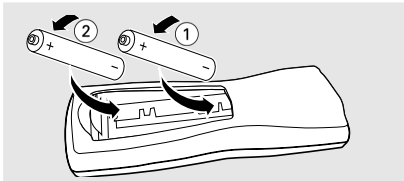

CAUTION!
– Remove batteries if they are exhausted or will not be used for a long time.
– Do not use old and new or different types of batteries in combination.
– Batteries contain chemical substances, so they should be disposed off properly.

Technical Remarks

DISMANTLING INSTRUCTIONS

Dismantling of the Cassette Cover

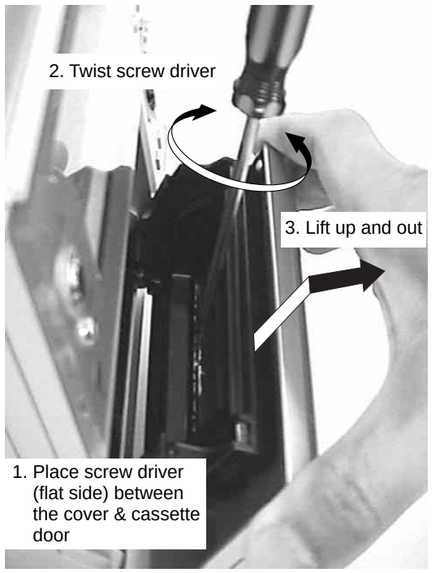

Figure 1 Remove Cassette Cover

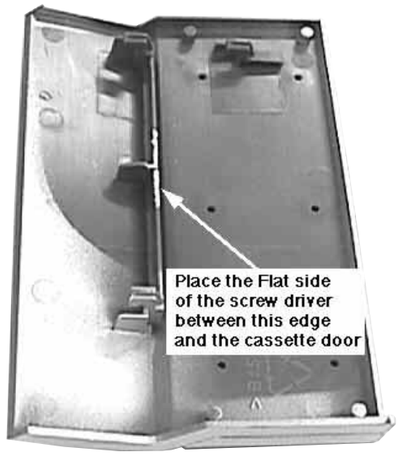

Figure 2 Cassette Cover

Dismantling of the 3DTC Module and Tuner Board

1) Loosen 4 screws and remove the Cover Top (pos 255) by sliding it out towards the rear before lifting up.
   - 2 screws on the rear
   - 1 screw each on the left & right side
2) Loosen 2 screws each to remove the Panel Left and Right (pos 253 & 254). The Panels are remove by sliding it towards the rear and outwards.
   - 1 screw on the side
   - 1 screw on the rear
3) Open the 3DTC Tray by sliding the lever (pos 36) as shown in figure 4 with the help of a flat head screw driver.
4) Remove the Cover Tray (pos 106) as shown in figure 3.
5) Loosen 4 screws A (see figure 4)to remove the 3DTC Module.
   - 2 screws on the front
   - 1 screw each on the left & right side
6) Loosen 3 screws E (see figure 8) on the Panel Rear (pos 256) & uncatch 2 catches C3 to remove the Tuner Board.

Figure 3

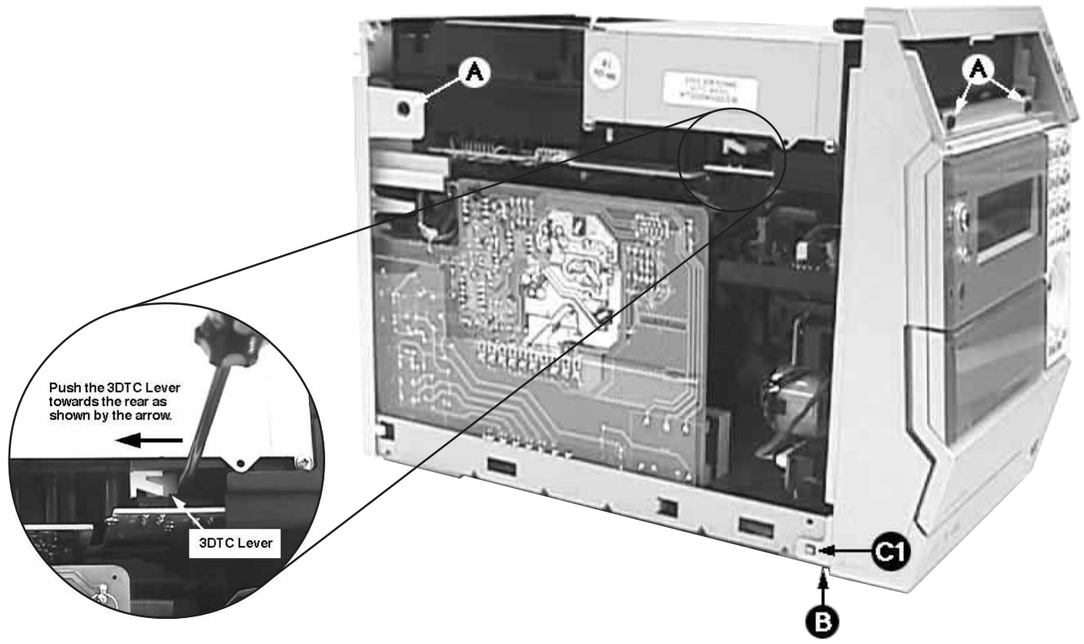

Figure 4

Detaching the Front Panel assembly from the Bottom/Rear assembly

1) Remove 2 screws B (see figure 4) from the bottom of the Cabinet Front (pos 101).
2) Release the fixation of the Combi Board to Bracket Combi (pos 252) by releasing 2 catches C2 and pulling the board outwards as shown in figure 5.
3) Uncatch 2 catches C1 (see figure 4) on the left & right sides of Cabinet Front (pos 101) and slides the Front Panel assembly out towards the front.

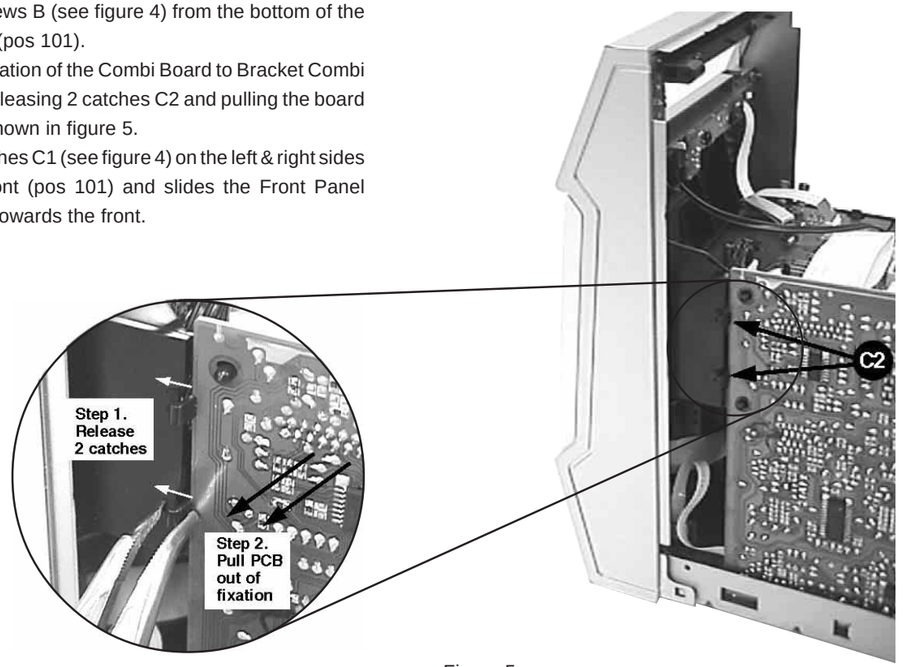

Figure 5

Dismantling of the Front Panel assembly

1) Loosen 4 screws C in figure 7 to remove the ETF8 Module.
2) Insert a strong string into the slot between the Jog knob (pos 136) and Cover control (pos 137), looped it until it engage into both the U-slot of the Jog knob and pulled it out as shown in figure 6.
3) Loosen 4 screws D to remove the Display Board assembly.

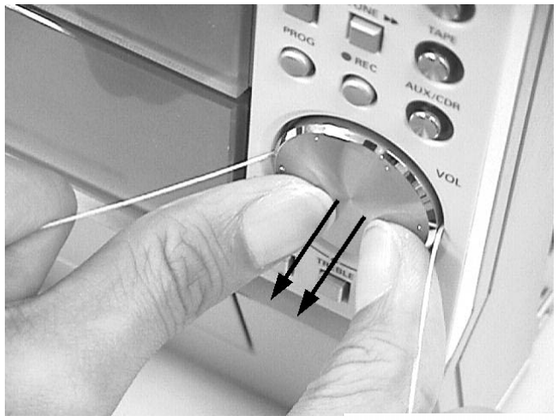

figure 6

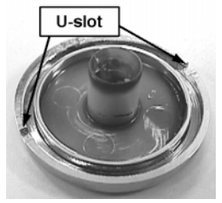

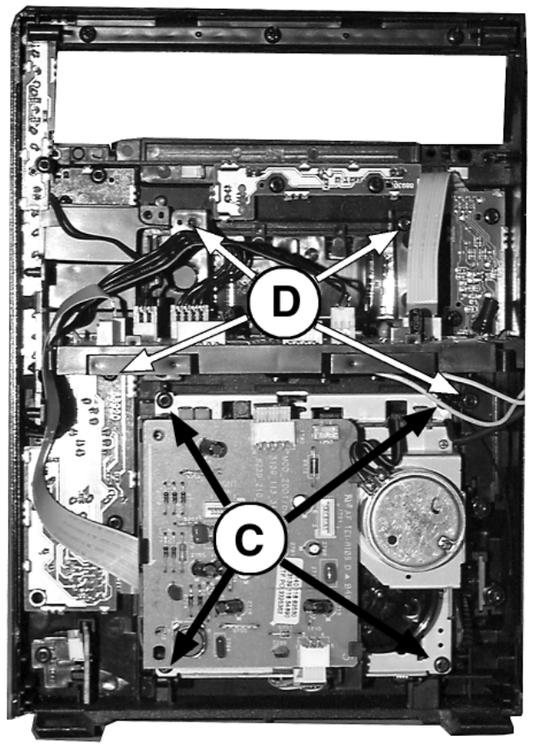

figure 7

Dismantling of Rear Panel

1) Loosen 3 screws E and 2 catches C3 to remove the Tuner Board assembly.
   Note: Tuner Board assembly can also be remove together with the Panel Rear.
2) Loosen 1 screw F and the 2 catches C4 to free the Mains socket board from the Panel Rear (pos 256).
3) Loosen 5 screws G and 2 catches C5 to remove the Panel Rear (pos 256) by sliding it out towards the rear.

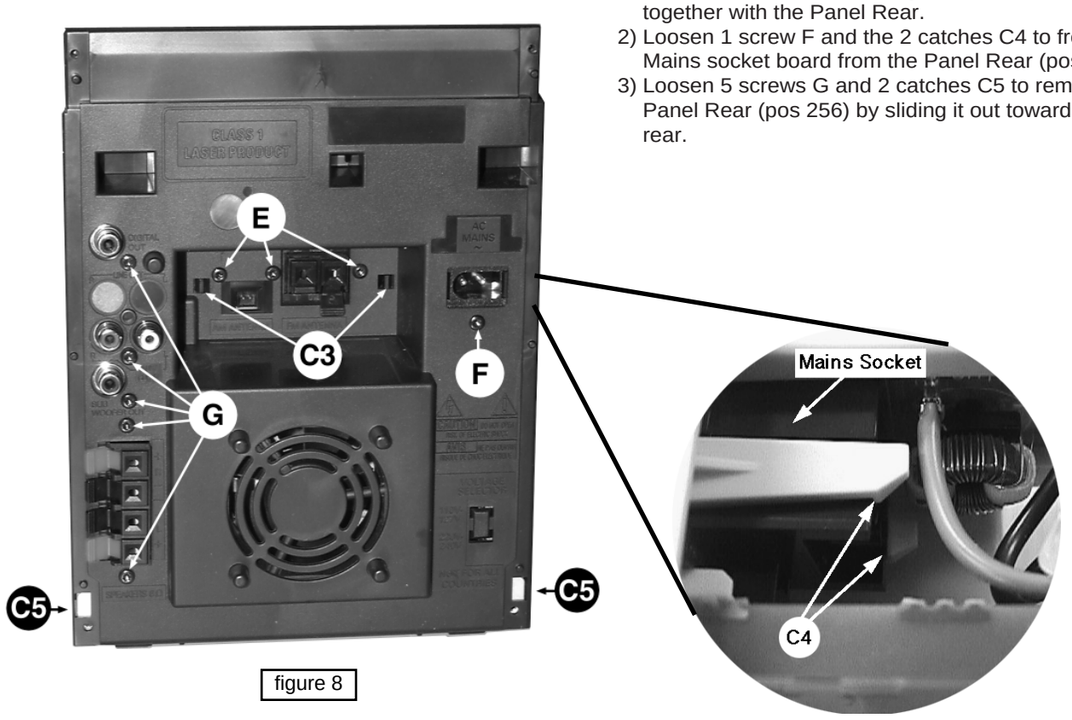

figure 8

Dismantling of the Bottom assembly

1) Loosen 1 screw H as shown in figure 9 to remove the Combi board assembly.
2) Loosen 1 screw J and uncatch Shield Transformer (pos 269) from the Bottom plate (pos 265) as shown in figure 11 to remove it.
3) Loosen 4 screws K mounting the Mains Transformer (pos 5001) to remove the Mains Board & Transformer assembly.
4) Loosen 4 screws L to remove the Fan (pos 267).

Note: During Fan replacement care should be taken to ensure that the following are correct:
- fan blades direction
- fan wire position

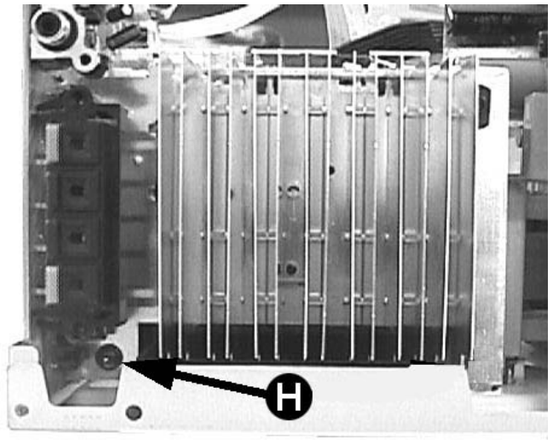

figure 9

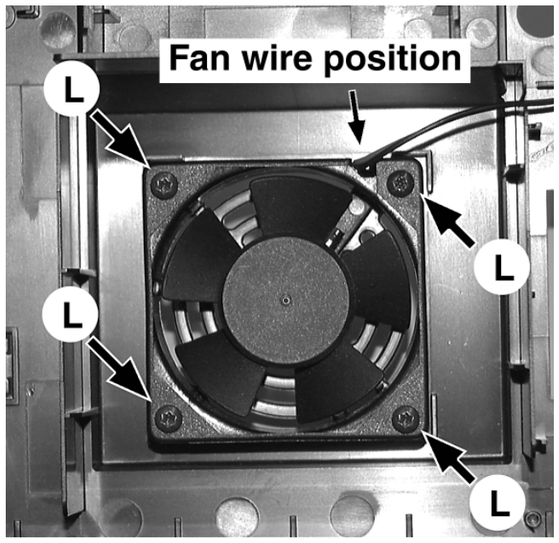

figure 10

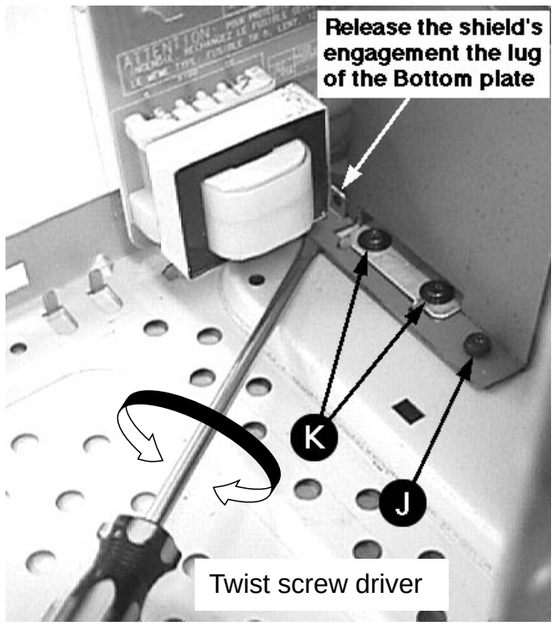

figure 11

SERVICE POSITIONS & REPAIR HINTS

1) During repair it is possible to disconnect the ECO6 Tuner board, ETF8 Tape Module and/or 3DTC Module completely unless the fault is suspected to be in that area.
   This will not affect the performance of the rest of the set.

2) Use Service position A for repairs on Combi or Mains Board.

3) Use Service position B for repairs on Tuner or 3DTC electronic.

4) Use Service position C for repairs on the ETF8 Tape module.
   Note: The flex cables are very fragile, care should be taken not to damage them during repair. After repair, be very sure that the flex cables are inserted properly into the flex sockets before encasing, otherwise faults may occur.

Service position A

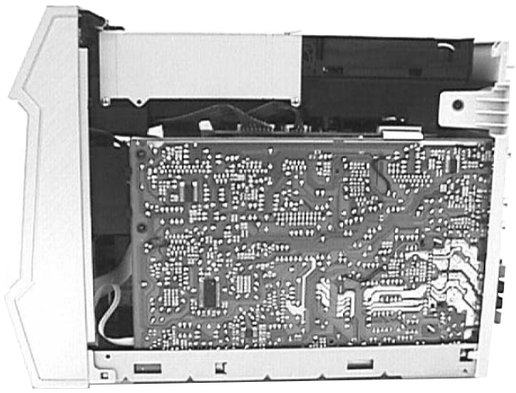

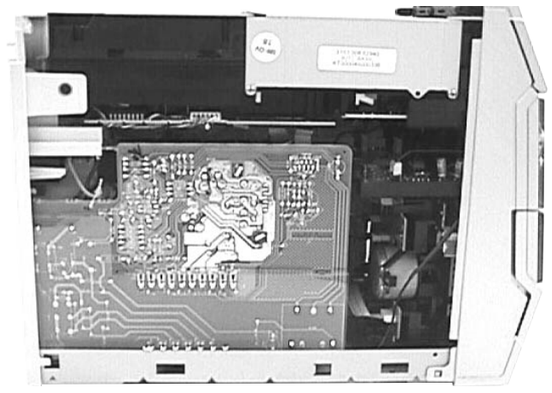

Service position B

Service position C

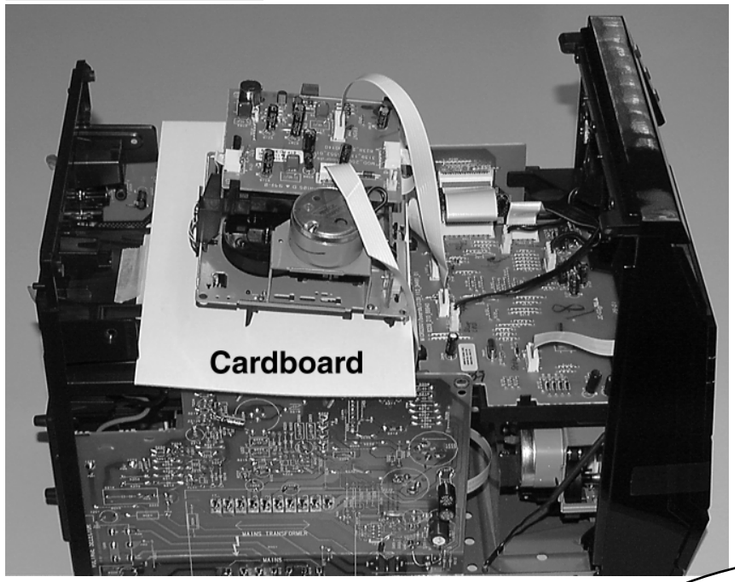

Access to copperside

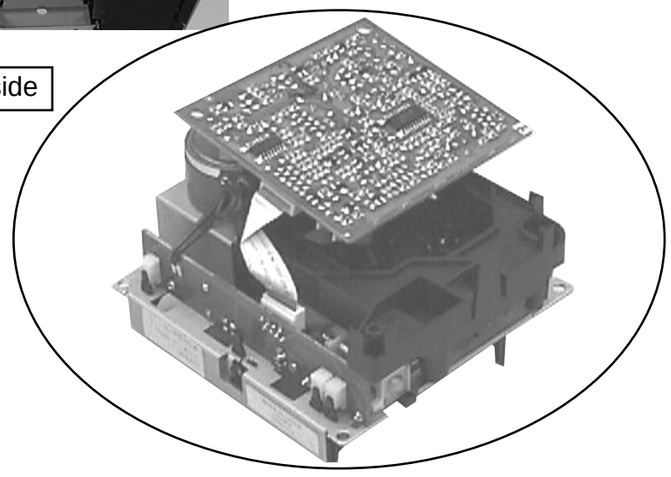

Service position D

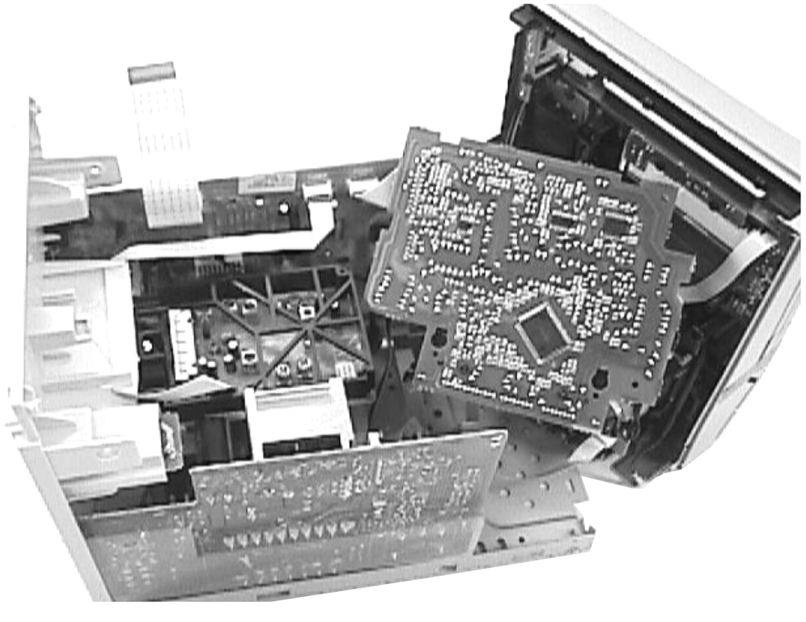

3-4

SERVICE TEST PROGRAM

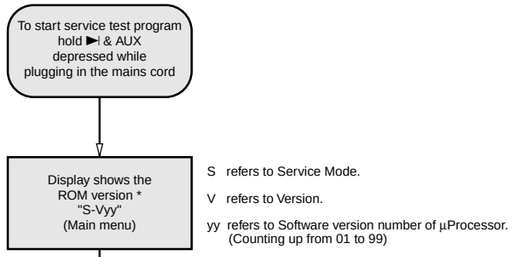

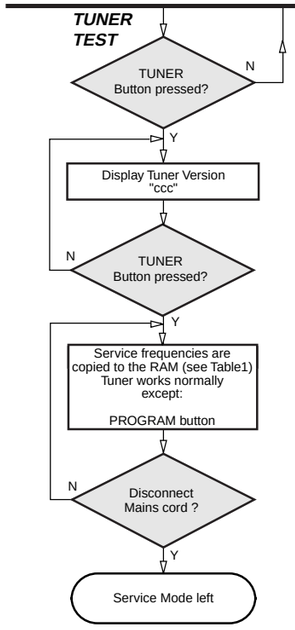

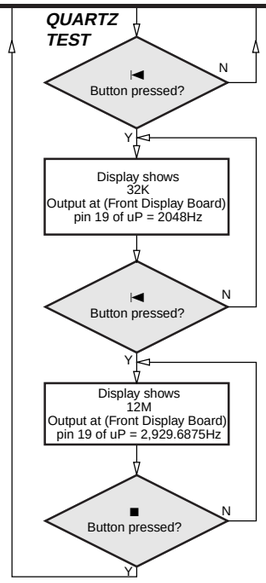

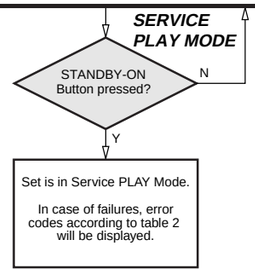

The Service Play Mode is intended to detect and identify the failures in the CD Mode.

In this mode the electronics will still function even when an error is detected so that repair activities can be carried out.

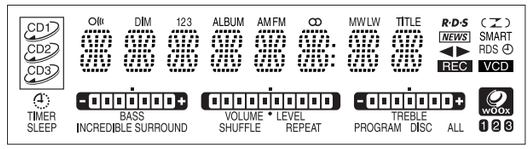

Figure 1

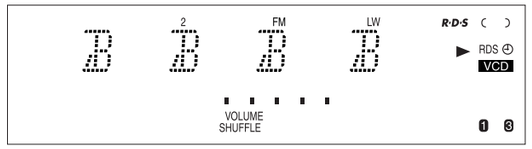

note 1 : 3CDC, TAPE and wOOx

Figure 2

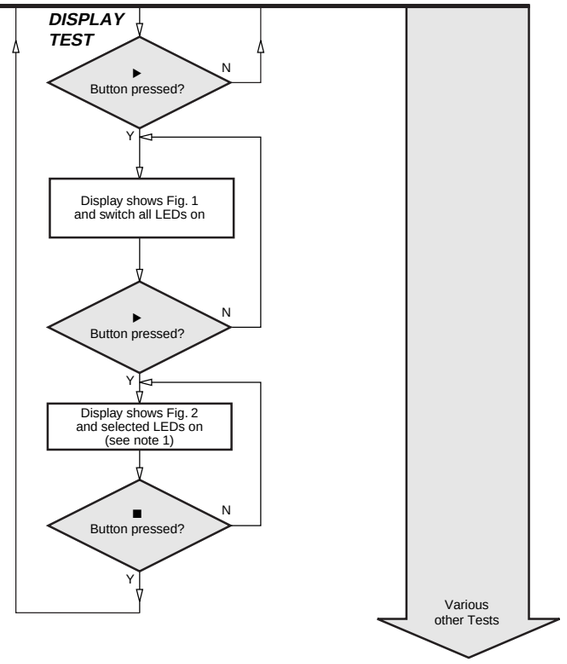

PRESET	Europe "EUR"	USA "USA"	Oversea "OSE"
1	87.5MHz	87.5MHz	87.5MHz
2	108MHz	108MHz	108MHz
3	531kHz	530kHz	531/530kHz*
4	1602kHz	1700kHz	1602/1700kHz*
5	558kHz	560kHz	558/560kHz*
6	1494kHz	1500kHz	1494/1500kHz*
7	153kHz	98MHz	98MHz
8	279kHz	87.5MHz	87.5MHz
9	198kHz	87.5MHz	87.5MHz
10	98MHz	87.5MHz	87.5MHz
11	87.5MHz	87.5MHz	87.5MHz

Table 1

Note: * Depending on the selected grid frequency (9 or 10kHz)
By holding the TUNER and ►► buttons depressed while switching on the Mains supply, one of the undermentioned features will be activated:
- the tuning grid frequency is toggled between 9kHz and 10kHz for the Oversea (/21) version.

Error code	Error Description
E1000	Focus Error Triggered when the focus could not be found within a certain time when starting up the CD or when the focus is lost for a certain time during play.
E1001	Radial Error Triggered when the radial servo is off-track for a certain time during play.
E1002	Sledge In Error The sledge did not reach its inner position (inner-switch is still close) before approximately 6 Sec. have passed by. Inner-switch or sledge motor problem.
E1003	Sledge Out Error The sledge did not come out of its inner position (inner-switch is still open) before approximately 250 mSec. have passed by. Inner-switch or sledge motor problem.
E1005	Jump-offtrack error Triggered in normal play when the jump destination could not be found within a certain time.
E1006	Subcode Error Triggered when a new subcode was missing for a certain time during play.
E1007	PLL Error The Phase Lock Loop could not lock within a certain time.
E1008	Turntable Motor Error Generated when the CD could not reached 75% of speed during startup within a certain time. Disc motor problem.
E1020	Focus Search Error The focus point has not been found within a certain time.
E1031	The active lower carriage does not come to the end position within a certain time. This can happen when the switches are defective, or when the carriage is blocked in between two end positions (example: 2 disc in one carriage). The time-out is approximately 5 seconds.
E1061	The drawer could not enter the inside position and is opening again. This can happen if the drawer is blocked such that it cannot go fully inside, or if the drawer switch is defective and never closes.
E1071	The active upper carriage does not come to the end position within a certain time. This happen when the switches are defective, or when the carriage is blocked in between two end positions (example: 2 disc in one carriage)/ The time-out is approximately 5 Sec.
E1079	The drawer could not enter the outside position and is stopped at its blocked position. This can happen if the drawer is blocked such that it cannot go fully outside, or if the drawer switch is defective and never opens.

Table 2

TEST	***Activated with***	***ACTION***
EEPROM TEST	►► ■ to Exit	8 test patterns will be sent to the EEPROM. "PASS" is displayed if the uProcessor read back the test patterns correctly, otherwise "ERROR" will be displayed.
EEPROM FORMAT	◄◄	Load default data. Display shows "NEW" for 1 second. ***Caution!*** ***All presets from the customer will be lost!!***
ENCODER TEST	Volume Knob	Display shows value for 2 seconds. Values increases or decreases in steps of 1 dB until VOL MUTE (Min.) or 0dB (Max.) is reached.
DEMO MODE	Treble	Pressing this button will toggle between DEMO ON and DEMO OFF. The DEMO status will scroll once on the Display.
LEAVE SERVICE TESTPROGRAM	Disconnect mains cord	

4-1

SET BLOCK DIAGRAM

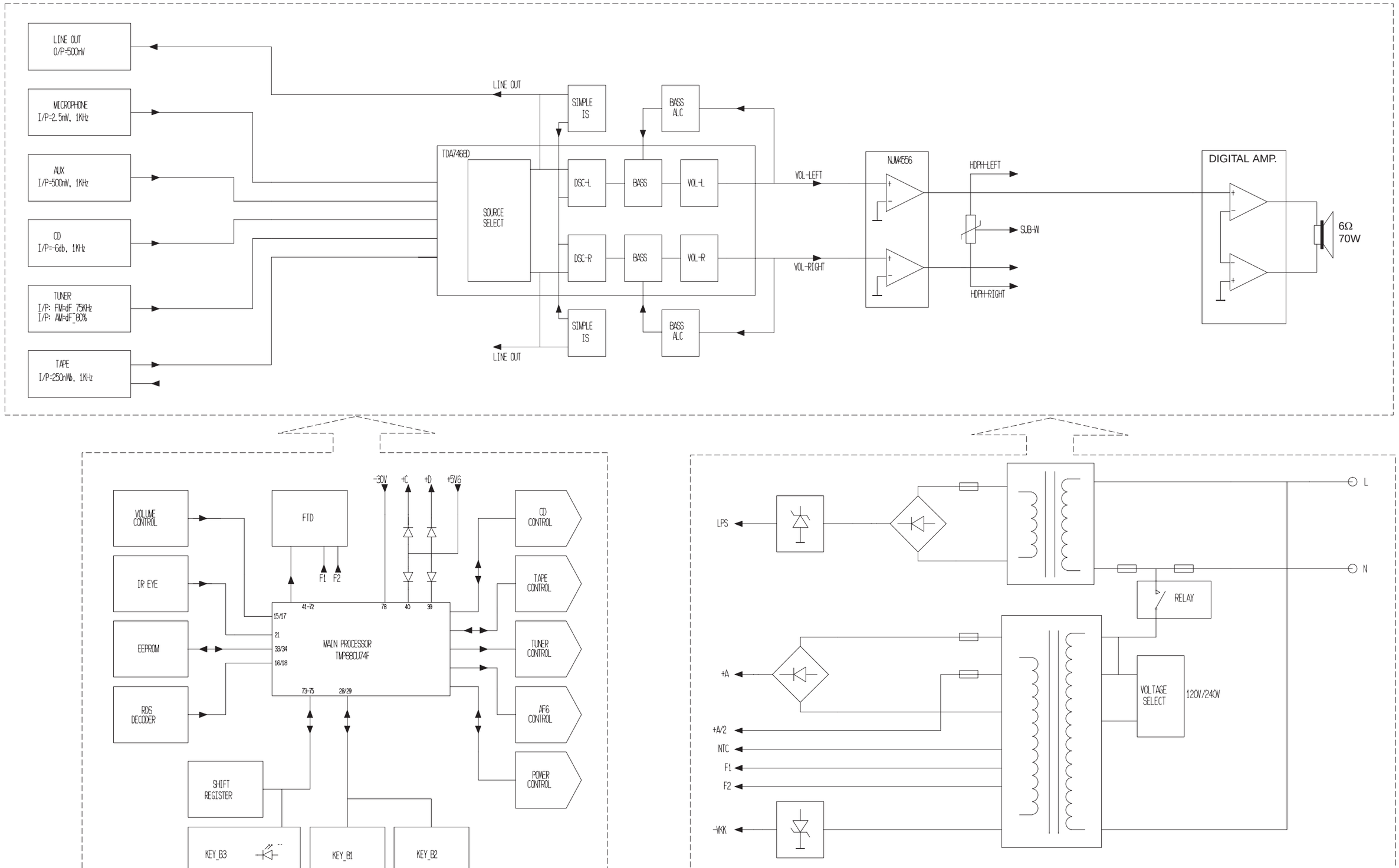

5-1

WIRING DIAGRAM

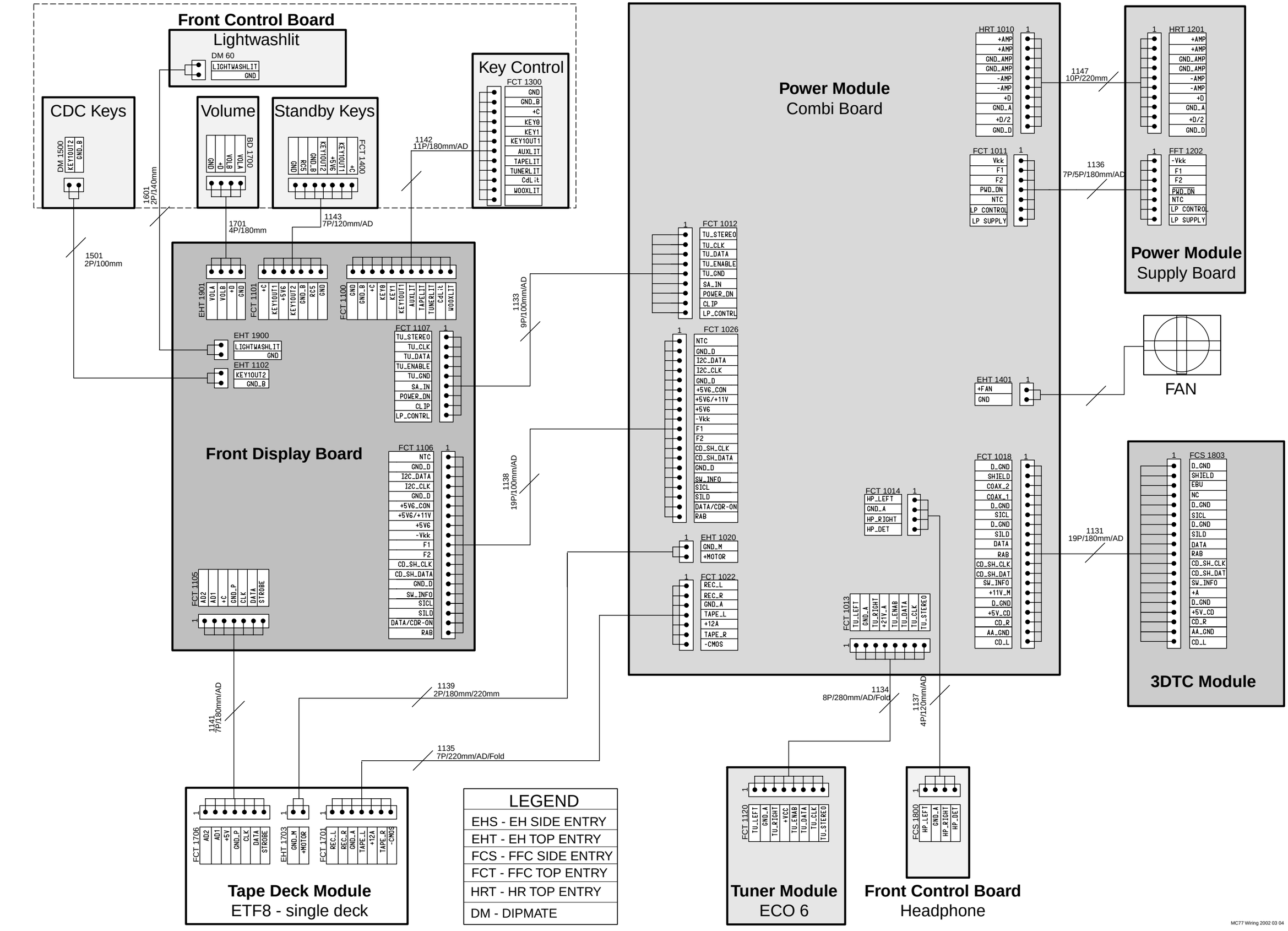

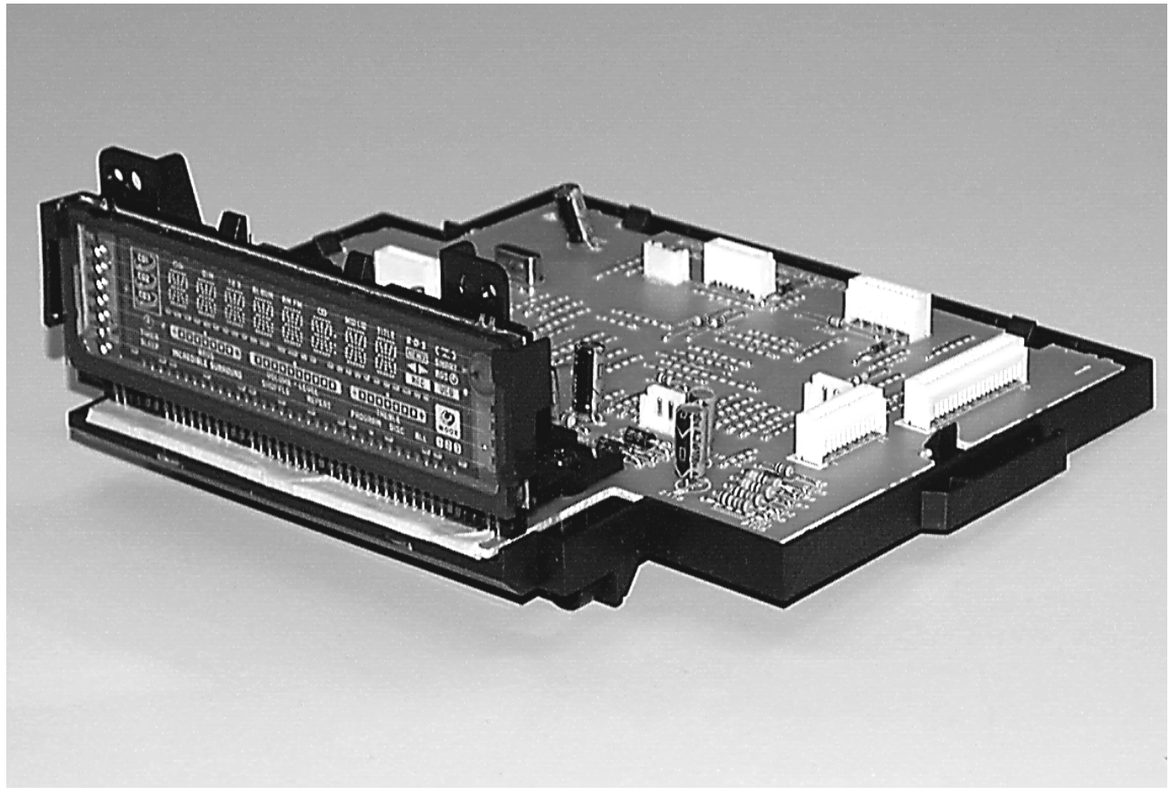

Front Display Board

stage .1

TABLE OF CONTENTS

FTD Display pins connection 6-1
Circuit diagram 6-2
Components & Chips Layout 6-3
Electrical parts list 6-4

6-1

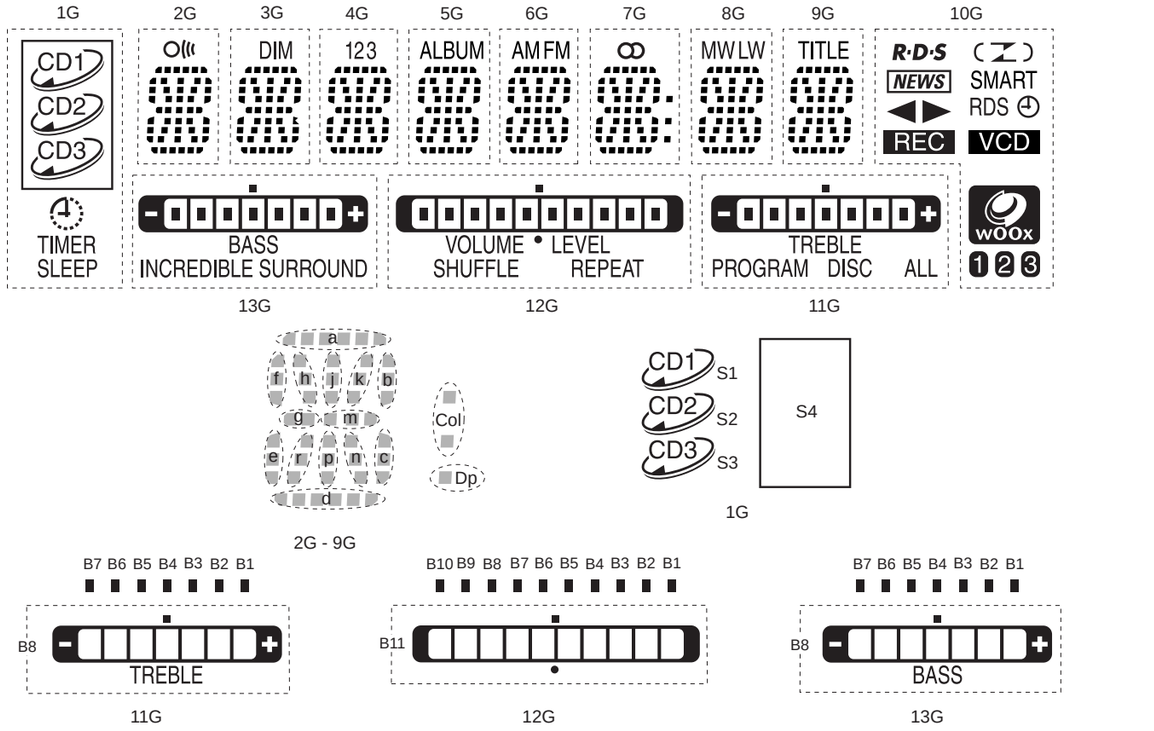

	1G	2G	3G	4G	5G	6G	7G	8G	9G	10G	11G	12G	13G
P1	-	a	a	a	a	a	a	a	a	R·D·S	ALL	B1	-
P2	-	h	h	h	h	h	h	h	h	NEWS	DISC	B2	-
P3	SLEEP	j , p	j , p	j , p	j , p	j , p	j , p	j , p	j , p	(	PROGRAM	B3	-
P4	CD1	k	k	k	k	k	k	k	k	)	B1	B4	B1
P5	CD2	b	b	b	b	b	b	b	b	)	B2	B5	B2
P6	CD3	f	f	f	f	f	f	f	f	SMART	B3	B6	B3
P7	-	m	m	m	m	m	m	m	m	RDS	B4	B7	B4
P8	TIMER	g	g	g	g	g	g	g	g	◀	B5	B8	B5
P9	S1	c	c	c	c	c	c	c	c	▶	B6	B9	B6
P10	S2	e	e	e	e	e	e	e	e	REC	B7	B10	B7
P11	S3	r	r	r	r	r	r	r	r	VCD	-	-	INCREDIBLE SURROUND
P12	S4	n	n	n	n	n	n	n	n	wOOx	B8	B11	B8
P13	-	d	d	d	d	d	d	d	d	1	-	VOLUME	-
P14	-	O((	DIM	1	ALBUM	AM	∞	MW	TITLE	2	-	LEVEL	-
P15	-	-	-	2	-	FM	Col	LW	-	3	-	SHUFFLE	-
P16	-	-	-	3	-	-	Dp	-	-	-	-	REPEAT	-

PIN NO.	44	43	42	41	40	39	38	37	36	35	34	33	32	31	30	29	28	27	26	25	24	23	22	21	20	19	18	17	16	15	14	13	12	11	10	9	8	7	6	5	4	3	2	1
CONNECTION	F2	F2	-	-	-	-	P16	P15	P14	P13	P12	P11	P10	P9	-	-	P8	P7	P6	P5	P4	P3	P2	P1	-	1G	2G	3G	4G	5G	6G	7G	8G	9G	10G	11G	12G	13G	-	-	-	-	F1	F1

6-2

1100 C1
1101 C2
1102 C6
1105 A18
1106 C17
1107 G17
1108 A8
1900 C5
1901 C4
2101 I11
2102 I11
2104 F5
2105 F4
2106 G8
2107 G9
2108 H9
2109 G9
2110 G9
2111 H16
2112 J8
2113 J9
2114 J9
2115 B16
2116 J10
2117 J11
2118 I12
2119 J12
2120 C11
2121 C12
2122 C12
2123 B13
2124 B13
2125 A14
2126 A15
2127 G13
2128 G13
2129 G13
2130 G13
2131 G14
2132 D15
2133 D15
2134 E15
2135 E15
2136 E15
2137 F15
2138 F15
2139 F15
2140 F15
2141 B17
2142 B17
2143 B17
2145 B4
2146 B6
2147 B5
2148 B6
2149 B5
2150 B6
2151 I14
2152 J14
2153 B17
2900 H5
2901 H3
2902 H4
2903 I5
2904 I1
2905 J1
2906 J1
2907 H11
3106 H13
3107 D6
3108 I13
3109 F8
3110 F8
3111 F8
3112 F8
3113 F8
3114 F8
3115 G8
3116 F10
3117 F10
3118 F10
3119 F10
3120 F10
3121 G10
3122 F10
3123 F11
3124 F11
3125 F11
3126 F11
3127 F12
3128 E11
3129 E11
3130 E11
3131 E11
3132 E12
3133 E11
3134 E11
3135 D12
3136 D11
3137 D11
3138 C11
3139 C11
3140 C11
3141 C11
3142 C10
3143 C10
3144 C10
3145 C10
3146 C10
3147 C10
3148 C10
3149 C9
3150 C9
3151 C9
3152 C9
3153 C9
3154 C9
3155 C9
3156 C8
3157 C8
3158 C8
3159 C8
3160 C8
3161 C8
3162 D7
3163 D7
3164 D7
3165 D7
3166 D7
3167 D7
3168 D7
3169 E7
3170 E7
3171 E7
3172 E7
3173 E7
3174 E7
3175 F7
3176 F7
3177 J8
3178 J9
3179 J9
3180 I10
3181 J10
3182 F5
3183 F4
3184 F4
3186 I12
3187 I14
3188 I15
3189 G13
3190 G13
3191 G13
3192 G13
3193 G14
3194 G14
3195 G14
3196 A12
3197 A13
3198 A13
3199 B13
3201 I12
3202 I13
3205 A17
3206 A17
3207 C15
3208 D16
3209 E16
3210 E16
3211 E16
3212 E16
3213 F16
3214 F16
3215 F16
3216 G14
3217 B5
3218 B6
3219 H15
3220 H16
3221 H16
3900 H4
3901 H3
3902 H1
3903 I3
3904 J5
3905 J5
3906 J6
3907 J6
3908 H11
3909 H11
3910 H11
4101 H13
5102 C12
5103 F9
5104 F9
5900 H3
5901 H4
5902 G10
6100 C12
6101 C12
6102 F5
6103 I10
6105 I15
6106 E7
6107 E7
6108 E7
6109 E7
6110 E7
6111 C3
7101 A14
7102 C7
7103 H9
7104 H15
7105 J8
7106 B5
7107 B6
7900 I1
7901 G10
9105 I12
9106 I13

1 2 3 4 5 6 7 8 9 10 11 12 13 14 15 16 17

A B C D E F G H I J

1100
FE-BT-VK-N
To KEYBOARD1

1101
FE-BT-VK-N
To Power

To VolBoard

1901
EH-B
VolA
VolB

1900
EH-B
LightWashLit
To LightWashLit

1102
EH-B
Key1Out2
GND_B
To CDCKEY

1108
HNA-13MS09T

7102
TMP88CU74F

8-Bit h. break. v. out w. latch P8
8-Bit high breakdown voltage output port with latch P7
8-Bit high breakdown v. output port with latch P6
80k pull down
P6-P9 source open drain
VFT driver circuit (automatic display)
RAM
ROM
Program Counter
CPU
8-Bit A/D Converter
4-Bit in/Output (tri-state) P5
8-Bit Input/Output (tri-state) P4
8-Bit Input/Output (tri-state) P0
8-Bit I/O P2 sink o.drain
8-Bit Input/Output (tri state) P1
8-B. I/O P3 (tristate)
5-Bit h. breakd. v. out w. latch P9
8-Bit h. breakdown v. out. port w. latch PA
sink o. drain
-22.2V
-F2
4.5Vac
-F1
-Vkk
-22.2V
4.5Vac
0.3V "ON"
"ON" 0.7V
0V
5103
32K768
5104
32K768

7106
BC847B
7107
BC847B
7103
BC847B
7105
BC847B
7104
BC847B
0~0.7V

7101
74HC4094D
SRG8
EN1
STB
"ON" 5V0
CdLit
TunerLit
TapeLit
AuxLit
wOOuLit
LightWashLit

1105
TpADC2
TpADC1
TPShCLK
TPShDATA
TPShSTR
To TAPE

1106
AmNC
I2C_DATA
I2C_CLK
CdShClk
CdShData
CdSwInfo
CdSicl
CdSida
CdSab
-30V
-Vkk
4.5Vac
F1
F2
4.5Vac
FE-BT-VK-N
To Combi

1107
TuRdsOut
TuStereo
TuClk
TuData
TuCE
SA_IN
PwrDwn
Clipping
Standby
FE-BT-VK-N
To Combi

7901
M24C02
E0
E1
E2
SCL
WC_
VCC
SDA
VSS

6101
1N4003
+5V6

6100
1N4148
+5V6_Con

6102
1N4148

6103
1N4003

6106 1N4148
6107 1N4148
6108 1N4148
6109 1N4148
6110 1N4148

7900
SAA6579T
ANTI-ALIASING FILTER
57 Khz BANDPASS (8th ORDER)
RECONSTRUCTION FILTER
OSCILLATOR AND DIVIDER
QUALITY BIT GENERATOR
CLOCKED COMPARATOR
COSTAS LOOP VARIABLE AND FIXED DIVIDER
BIPHASE SYMBOL DECODER
DIFFERENTIAL DECODER
REFERENCE VOLTAGE
CLOCK REGENERATION AND SYNC
TEST LOGIC AND OUTPUT SELECTOR SWITCH
AT-51

For RDS versions only
For sets without RDS only
For sets with RDS only
For Provision only

8239_210_88940 ... 3449 pt 1 dd wk103

Component Layout

1100 C5	1900 A3	2151 D1	3186 D5	5102 D4	6103 D5	6111 B2	9114 E2	9121 E2	9128 C3	9136 B4	9143 B5	9151 C5	9158 C5	9166 A3
1101 C2	1901 C5	2152 D1	3187 D5	5103 C2	6105 D5	9105 D5	9115 B1	9122 B2	9129 C4	9137 B4	9144 E3	9152 C5	9159 D5	9167 C4
1102 B5	2115 D4	2906 A2	3188 C5	5104 C2	6106 C1	9106 D5	9116 B1	9123 B3	9130 A2	9138 B4	9146 B5	9153 C5	9160 B3	9168 C4
1105 A3	2118 D5	3108 A4	3201 D5	5900 B2	6107 C1	9110 C1	9117 B1	9124 B3	9131 A4	9139 B4	9147 B5	9154 C5	9161 E4	9169 B5
1106 B5	2119 C5	3122 B2	3202 D5	6100 D5	6108 C1	9111 C1	9118 C2	9125 C3	9132 B3	9140 B4	9148 C4	9155 C5	9162 E4	
1107 A5	2121 D4	3124 C4	3205 B4	6101 D5	6109 C1	9112 C2	9119 E2	9126 C3	9134 B3	9141 B4	9149 C4	9156 C5	9163 E4	
1108 E3	2122 D4	3182 B5	3206 B4	6102 A5	6110 A4	9113 D1	9120 E2	9127 C3	9135 A5	9142 B4	9150 C4	9157 B5	9165 A3	

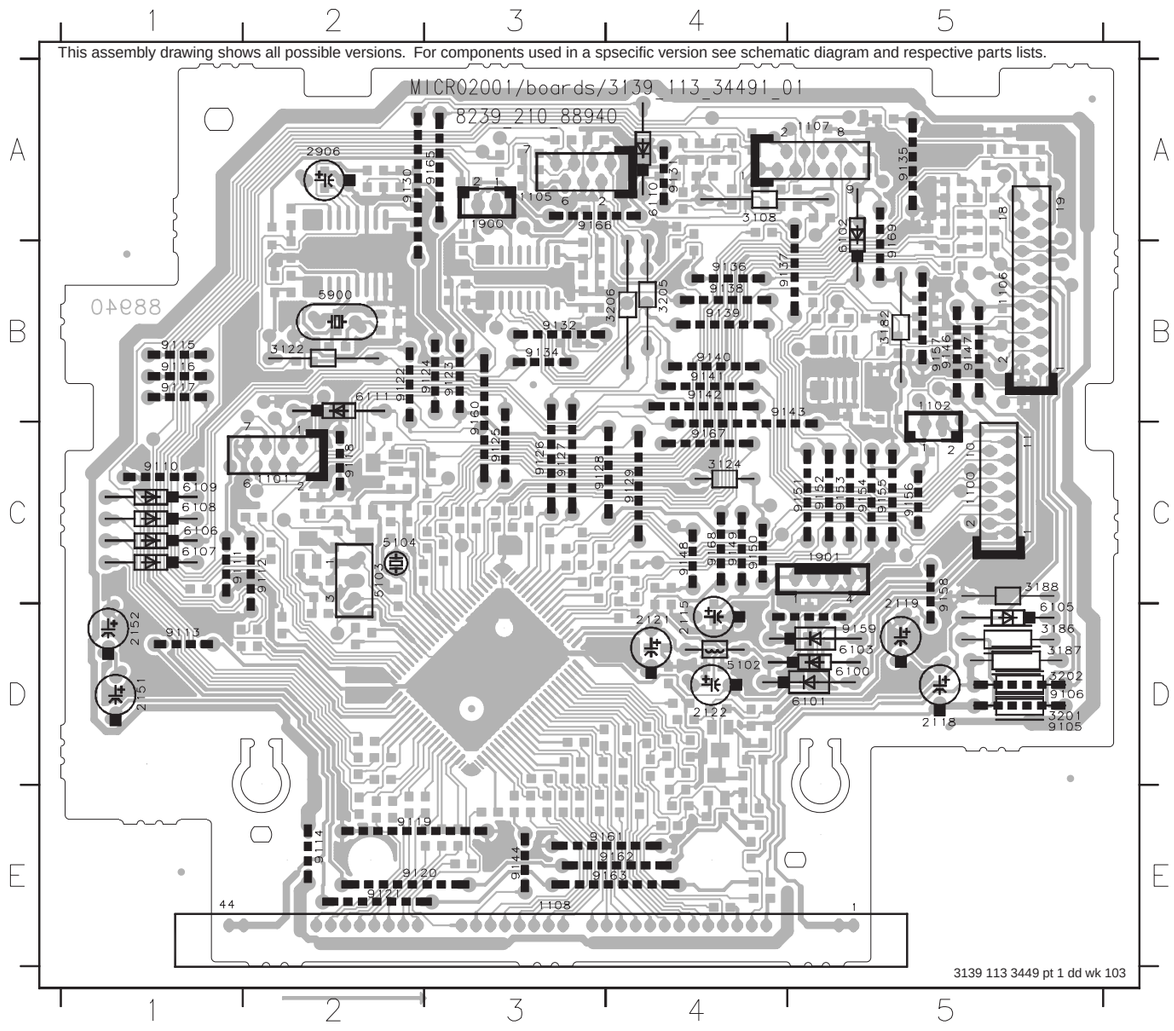

Chip Layout

2101 D2	2117 B1	2135 A1	2150 D2	3112 C4	3128 C3	3142 D2	3156 E3	3170 D4	3189 A2	3210 A1	3902 A4	4105 E2	4123 B4	7105 C4
2102 D2	2120 D2	2136 A1	2153 A3	3113 D4	3129 C3	3143 D2	3157 D3	3171 E4	3190 A2	3211 A1	3903 B4	4106 E2	4124 B2	7106 E2
2104 A1	2123 B3	2137 A1	2900 A4	3114 D4	3130 C3	3144 D2	3158 E3	3172 D4	3191 A2	3212 A1	3904 A4	4107 B1	4125 D2	7107 D2
2105 B1	2124 B3	2138 A1	2901 B4	3115 D4	3131 C3	3145 E2	3159 E3	3173 D4	3192 A2	3213 A1	3905 B4	4109 D1	4126 D2	7900 A4
2106 C4	2125 B3	2139 A1	2902 B4	3116 C4	3132 C3	3146 D2	3160 E3	3174 D4	3193 A2	3214 A1	3906 B4	4112 B1	4127 B3	7901 B1
2107 C4	2126 B3	2140 A1	2903 A4	3117 C3	3133 C3	3147 D2	3161 E3	3175 D5	3194 A2	3215 A1	3907 B4	4113 E2	4128 A3	
2108 C4	2127 A2	2141 A3	2904 A4	3118 C3	3134 C2	3148 E2	3162 E3	3176 D4	3195 A2	3216 A2	3908 B1	4114 B1	4129 A3	
2109 C4	2128 A2	2142 A3	2905 A4	3119 C3	3135 C2	3149 D3	3163 E3	3177 C4	3196 B3	3217 E2	3909 B1	4115 B1	4130 D2	
2110 C4	2129 A2	2143 A3	2907 B1	3120 C3	3136 D2	3150 D3	3164 E3	3178 C4	3197 B3	3218 D2	3910 B1	4116 A1	5901 A4	
2111 C4	2130 A2	2145 D2	3106 A1	3121 C3	3137 D2	3151 E3	3165 E3	3179 C4	3198 B3	3219 C4	3911 B1	4118 A3	5902 B1	
2112 C4	2131 A1	2146 D2	3107 C1	3123 C3	3138 D2	3152 D3	3166 E3	3180 C2	3199 B3	3220 A2	4101 A1	4119 A3	7101 B3	
2113 C4	2132 B1	2147 E2	3109 D4	3125 C3	3139 D2	3153 D3	3167 E4	3181 C2	3207 B1	3221 C4	4102 E2	4120 A3	7102 D3	
2114 C4	2133 B1	2148 D2	3110 C5	3126 C3	3140 D2	3154 E3	3168 E4	3183 B1	3208 B1	3900 A4	4103 E2	4121 B3	7103 C4	
2116 D1	2134 A1	2149 E2	3111 C4	3127 C3	3141 D2	3155 D3	3169 E4	3184 B1	3209 B1	3901 B4	4104 E2	4122 A2	7104 C4	

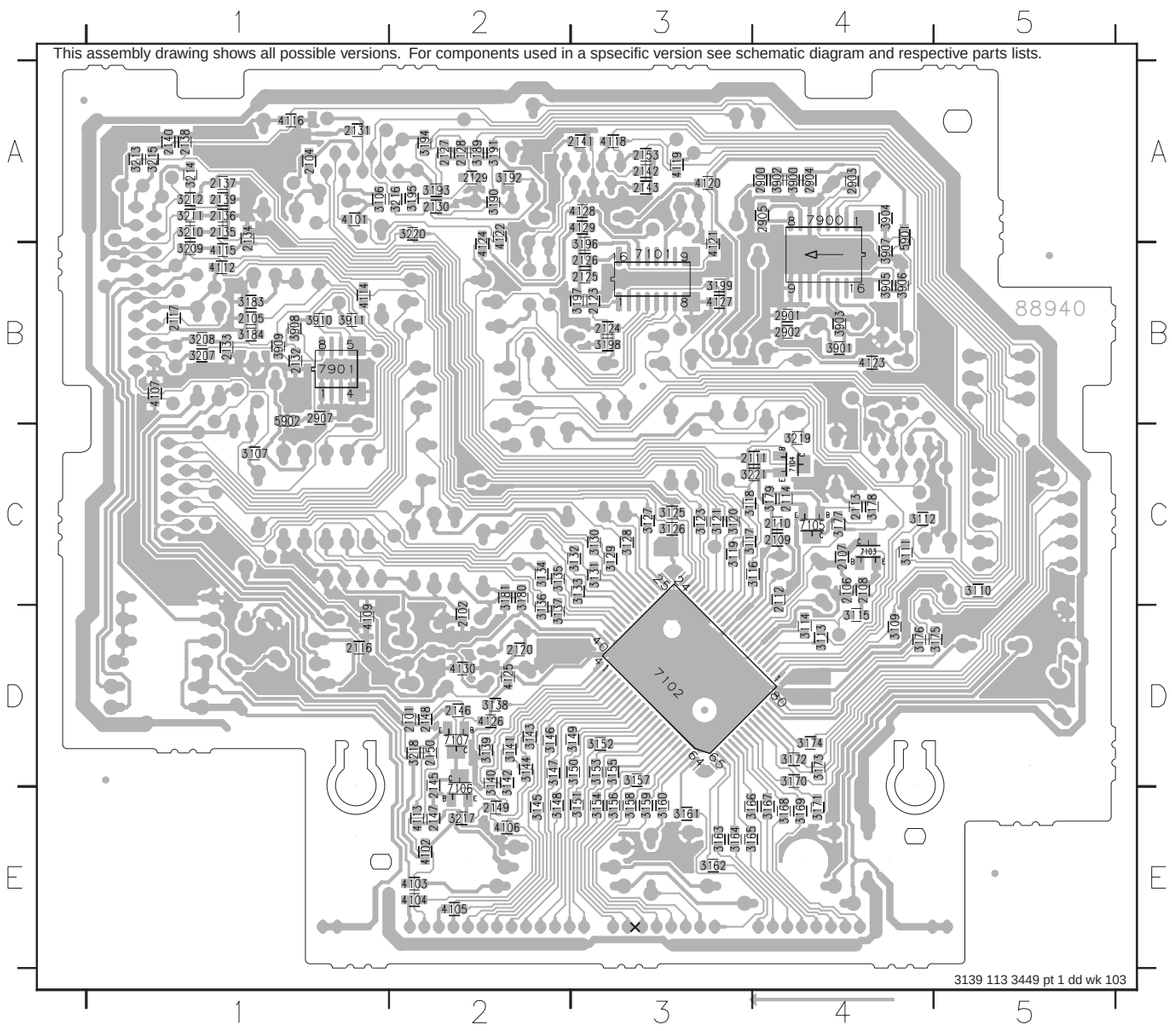

ELECTRICAL PARTSLIST Front Display Board

MISCELLANEOUS

1100	4822 267 11039	FFC-CONNECTOR, 11P, TOP ENTRY	
1101	4822 267 10953	FFC-CONNECTOR, 7P, TOP ENTRY	
1105	4822 267 10953	FFC-CONNECTOR, 7P, TOP ENTRY	
1106	4822 265 11553	FFC-CONNECTOR, 19P, TOP ENTRY	
1107	2422 025 14518	FFC-CONNECTOR, 9P, TOP ENTRY	
1108	3139 110 52680	FTD Display MC-77	

CAPACITORS

2101 ©	2238 586 59812	100nF	10%	50V	
2102 ©	2238 586 59812	100nF	10%	50V	
2104 ©	3198 017 41050	1µF	20%	10V	
2105 ©	4822 126 13879	220nF	20%	16V	
2106 ©	4822 126 14223	2,2pF	10%	50V	
2107 ©	4822 122 33761	22pF	5%	50V	
2108 ©	2222 867 15339	33pF	5%	50V	
2109 ©	4822 122 33761	22pF	5%	50V	
2110 ©	4822 122 33761	22pF	5%	50V	
2111 ©	5322 126 11583	10nF	10%	63V	
2112 ©	5322 126 11583	10nF	10%	63V	
2113 ©	2238 586 59812	100nF	10%	50V	
2115	4822 124 40433	47µF	20%	25V	
2116 ©	2238 586 59812	100nF	10%	50V	
2117 ©	2238 586 59812	100nF	10%	50V	
2118	4822 124 40769	4,7µF	20%	100V	
2119	4822 124 40769	4,7µF	20%	100V	
2120 ©	2238 586 59812	100nF	10%	50V	
2121	4822 124 40433	47µF	20%	25V	
2122	4822 124 40433	47µF	20%	25V	
2123 ©	2020 552 94427	100pF	5%	50V	
2124 ©	2020 552 94427	100pF	5%	50V	
2125 ©	2238 586 59812	100nF	10%	50V	
2126 ©	2238 586 59812	100nF	10%	50V	
2127 ©	2020 552 94427	100pF	5%	50V	
2128 ©	2020 552 94427	100pF	5%	50V	
2129 ©	2020 552 94427	100pF	5%	50V	
2130 ©	2020 552 94427	100pF	5%	50V	
2131 ©	2020 552 94427	100pF	5%	50V	
2132 ©	4822 122 33741	10pF	10%	50V	
2133 ©	4822 122 33741	10pF	10%	50V	
2134 ©	4822 122 33777	47pF	5%	63V	
2135 ©	4822 122 33777	47pF	5%	63V	
2136 ©	4822 122 33777	47pF	5%	63V	
2137 ©	4822 122 33741	10pF	10%	50V	
2138 ©	4822 122 33741	10pF	10%	50V	
2139 ©	4822 122 33741	10pF	10%	50V	
2140 ©	4822 122 33741	10pF	10%	50V	
2141 ©	2238 586 59812	100nF	10%	50V	
2142 ©	2020 552 94427	100pF	5%	50V	
2143 ©	2020 552 94427	100pF	5%	50V	
2145 ©	4822 122 33761	22pF	5%	50V	
2146 ©	2020 552 94427	100pF	5%	50V	
2147 ©	2020 552 94427	100pF	5%	50V	
2148 ©	2020 552 94427	100pF	5%	50V	
2149 ©	2020 552 94427	100pF	5%	50V	
2150 ©	2020 552 94427	100pF	5%	50V	
2151	4822 124 40769	4,7µF	20%	100V	
2152	4822 124 40769	4,7µF	20%	100V	
2153 ©	2020 552 94427	100pF	5%	50V	
2900 ©	3198 016 31020	1nF	5%	25V	
2901 ©	4822 126 14226	82pF		50V	
2902 ©	4822 122 33777	47pF	5%	63V	
2903 ©	2238 586 59812	100nF	10%	50V	
2904 ©	4822 126 14249	560pF	10%	50V	

CAPACITORS

2905 ©	4822 126 14249	560pF	10%	50V	
2906	4822 124 22652	2,2µF	20%	50V	
2907 ©	3198 017 41050	1µF	20%	10V	

RESISTORS

3106 ©	4822 051 30684	680kΩ	5%	0,06W	
3107 ©	4822 117 12968	820Ω	5%	0,06W	
3108	4822 116 83866	1MΩ	5%	0,5W	
3109 ©	4822 051 30102	1kΩ	5%	0,06W	
3110 ©	4822 051 30102	1kΩ	5%	0,06W	
3111 ©	4822 051 30102	1kΩ	5%	0,06W	
3112 ©	4822 051 30102	1kΩ	5%	0,06W	
3113 ©	4822 051 30102	1kΩ	5%	0,06W	
3114 ©	4822 051 30102	1kΩ	5%	0,06W	
3115 ©	4822 051 30472	4,7kΩ	5%	0,06W	
3116 ©	4822 051 30102	1kΩ	5%	0,06W	
3117 ©	4822 051 30101	100Ω	5%	0,06W	
3118 ©	4822 051 30102	1kΩ	5%	0,06W	
3119 ©	4822 051 30102	1kΩ	5%	0,06W	
3120 ©	4822 051 30102	1kΩ	5%	0,06W	
3121 ©	4822 051 30102	1kΩ	5%	0,06W	
3122	4822 050 11002	1kΩ	5%	0,2W	
3123 ©	4822 051 30102	1kΩ	5%	0,06W	
3124	4822 050 11002	1kΩ	5%	0,2W	
3125 ©	4822 051 30102	1kΩ	5%	0,06W	
3126 ©	4822 051 30102	1kΩ	5%	0,06W	
3127 ©	4822 051 30102	1kΩ	5%	0,06W	
3128 ©	4822 051 30102	1kΩ	5%	0,06W	
3129 ©	4822 051 30102	1kΩ	5%	0,06W	
3130 ©	4822 051 30102	1kΩ	5%	0,06W	
3131 ©	4822 051 30102	1kΩ	5%	0,06W	
3132 ©	4822 051 30102	1kΩ	5%	0,06W	
3133 ©	4822 051 30102	1kΩ	5%	0,06W	
3134 ©	4822 051 30102	1kΩ	5%	0,06W	
3135 ©	4822 051 30102	1kΩ	5%	0,06W	
3136 ©	4822 051 30102	1kΩ	5%	0,06W	
3137 ©	4822 051 30102	1kΩ	5%	0,06W	
3138 ©	4822 051 30102	1kΩ	5%	0,06W	
3139 ©	4822 051 30102	1kΩ	5%	0,06W	
3140 ©	4822 051 30102	1kΩ	5%	0,06W	
3141 ©	4822 051 30102	1kΩ	5%	0,06W	
3142 ©	4822 051 30102	1kΩ	5%	0,06W	
3143 ©	4822 051 30102	1kΩ	5%	0,06W	
3144 ©	4822 051 30102	1kΩ	5%	0,06W	
3145 ©	4822 051 30102	1kΩ	5%	0,06W	
3146 ©	4822 051 30102	1kΩ	5%	0,06W	
3147 ©	4822 051 30102	1kΩ	5%	0,06W	
3148 ©	4822 051 30102	1kΩ	5%	0,06W	
3149 ©	4822 051 30102	1kΩ	5%	0,06W	
3150 ©	4822 051 30102	1kΩ	5%	0,06W	
3151 ©	4822 051 30102	1kΩ	5%	0,06W	
3152 ©	4822 051 30102	1kΩ	5%	0,06W	
3153 ©	4822 051 30102	1kΩ	5%	0,06W	
3154 ©	4822 051 30102	1kΩ	5%	0,06W	
3155 ©	4822 051 30102	1kΩ	5%	0,06W	
3156 ©	4822 051 30102	1kΩ	5%	0,06W	
3157 ©	4822 051 30102	1kΩ	5%	0,06W	
3158 ©	4822 051 30102	1kΩ	5%	0,06W	
3159 ©	4822 051 30102	1kΩ	5%	0,06W	
3160 ©	4822 051 30102	1kΩ	5%	0,06W	
3161 ©	4822 051 30102	1kΩ	5%	0,06W	
3162 ©	4822 051 30102	1kΩ	5%	0,06W	
3163 ©	4822 051 30102	1kΩ	5%	0,06W	
3164 ©	4822 051 30102	1kΩ	5%	0,06W	

6-4

ELECTRICAL PARTSLIST Front Display Board

RESISTORS

3165 ©	4822 051 30102	1kΩ	5%	0,06W	
3166 ©	4822 051 30102	1kΩ	5%	0,06W	
3167 ©	4822 051 30102	1kΩ	5%	0,06W	
3168 ©	4822 051 30102	1kΩ	5%	0,06W	
3169 ©	4822 051 30102	1kΩ	5%	0,06W	
3170 ©	4822 051 30102	1kΩ	5%	0,06W	
3171 ©	4822 051 30102	1kΩ	5%	0,06W	
3172 ©	4822 051 30102	1kΩ	5%	0,06W	
3173 ©	4822 051 30102	1kΩ	5%	0,06W	
3174 ©	4822 051 30102	1kΩ	5%	0,06W	
3175 ©	4822 051 30102	1kΩ	5%	0,06W	
3176 ©	4822 051 30102	1kΩ	5%	0,06W	
3177 ©	4822 051 30102	1kΩ	5%	0,06W	
3178 ©	4822 051 30684	680kΩ	5%	0,06W	
3179 ©	4822 051 30105	1MΩ	5%	0,06W	
3180 ©	4822 051 30272	2,7kΩ	5%	0,06W	
3181 ©	4822 117 12902	8,2kΩ	1%	0,06W	
3182	4822 116 52298	680kΩ	5%	0,5W	
3183 ©	4822 051 30223	22kΩ	5%	0,06W	
3184 ©	4822 051 30474	470kΩ	5%	0,06W	
3186	4822 052 10479	47Ω	5%	0,3W	
3187	4822 052 10479	47Ω	5%	0,3W	
3188	4822 116 52257	22kΩ	5%	0,5W	
3189 ©	4822 051 30103	10kΩ	5%	0,06W	
3190 ©	4822 051 30103	10kΩ	5%	0,06W	
3191 ©	4822 051 30103	10kΩ	5%	0,06W	
3192 ©	4822 117 13632	100kΩ	1%	0,06W	
3193 ©	4822 051 30102	1kΩ	5%	0,06W	
3194 ©	4822 051 30102	1kΩ	5%	0,06W	
3195 ©	4822 051 30102	1kΩ	5%	0,06W	
3196 ©	4822 051 30103	10kΩ	5%	0,06W	
3197 ©	4822 051 30103	10kΩ	5%	0,06W	
3198 ©	4822 051 30103	10kΩ	5%	0,06W	
3199 ©	4822 051 30103	10kΩ	5%	0,06W	
3201	4822 052 10228	2,2Ω	5%	0,33W	
3202	4822 052 10228	2,2Ω	5%	0,33W	
3205	4822 116 52175	100Ω	5%	0,5W	
3206	4822 116 52175	100Ω	5%	0,5W	
3207 ©	4822 051 30221	220Ω	5%	0,06W	
3208 ©	4822 051 30221	220Ω	5%	0,06W	
3209 ©	4822 051 30221	220Ω	5%	0,06W	
3210 ©	4822 051 30221	220Ω	5%	0,06W	
3211 ©	4822 051 30221	220Ω	5%	0,06W	
3212 ©	4822 051 30471	470Ω	5%	0,06W	
3213 ©	4822 051 30471	470Ω	5%	0,06W	
3214 ©	4822 051 30471	470Ω	5%	0,06W	
3215 ©	4822 051 30471	470Ω	5%	0,06W	
3216 ©	4822 051 30223	22kΩ	5%	0,06W	
3217 ©	4822 117 12864	82kΩ	5%	0,06W	
3218 ©	4822 117 12864	82kΩ	5%	0,06W	
3219 ©	4822 051 30103	10kΩ	5%	0,06W	
3220 ©	4822 117 12925	47kΩ	1%	0,06W	
3221 ©	4822 051 30103	10kΩ	5%	0,06W	
3900 ©	4822 051 30103	10kΩ	5%	0,06W	
3901 ©	4822 051 30222	2,2kΩ	5%	0,06W	
3902 ©	4822 051 30152	1,5kΩ	5%	0,06W	
3903 ©	4822 117 12891	220kΩ	1%	0,06W	
3904 ©	4822 051 30102	1kΩ	5%	0,06W	
3905 ©	4822 051 30102	1kΩ	5%	0,06W	
3908 ©	4822 051 30103	10kΩ	5%	0,06W	
3909 ©	4822 051 30103	10kΩ	5%	0,06W	
3910 ©	4822 051 30102	1kΩ	5%	0,06W	
3911 ©	4822 051 30102	1kΩ	5%	0,06W	
4102 ©	4822 051 30008	CHIP JUMPER 0603			

RESISTORS

4103 ©	4822 051 30008	CHIP JUMPER 0603
4104 ©	4822 051 30008	CHIP JUMPER 0603
4105 ©	4822 051 30008	CHIP JUMPER 0603
4106 ©	4822 051 30008	CHIP JUMPER 0603
4107 ©	4822 051 30008	CHIP JUMPER 0603
4109 ©	4822 051 30008	CHIP JUMPER 0603
4112 ©	4822 051 30008	CHIP JUMPER 0603
4113 ©	4822 051 30008	CHIP JUMPER 0603
4114 ©	4822 051 30008	CHIP JUMPER 0603
4115 ©	4822 051 30008	CHIP JUMPER 0603
4116 ©	4822 051 30008	CHIP JUMPER 0603
4118 ©	4822 051 30008	CHIP JUMPER 0603
4119 ©	4822 051 30008	CHIP JUMPER 0603
4120 ©	4822 051 30008	CHIP JUMPER 0603
4121 ©	4822 051 30008	CHIP JUMPER 0603
4122 ©	4822 051 30008	CHIP JUMPER 0603
4123 ©	4822 051 30008	CHIP JUMPER 0603
4124 ©	4822 051 30109	10Ω 5% 0,06W
4125 ©	4822 051 30008	CHIP JUMPER 0603
4126 ©	4822 051 30008	CHIP JUMPER 0603
4127 ©	4822 051 30008	CHIP JUMPER 0603
4128 ©	4822 051 30008	CHIP JUMPER 0603
4129 ©	4822 051 30008	CHIP JUMPER 0603
4130 ©	4822 051 30008	CHIP JUMPER 0603

COILS

5102	4822 157 62552	2,2µH
5103	5322 242 73686	CERAMIC RESONATOR, 12MHZ
5104	4822 242 70938	CRYSTAL 32,768kHz
5900	4822 242 11033	RESONATOR 4,332MHz
5901 ©	4822 157 10586	2,2µH
5902 ©	4822 157 10586	2,2µH

DIODES

6100	4822 130 30621	1N4148
6101	4822 130 31878	1N4003G
6102	4822 130 30621	1N4148
6103	4822 130 31878	1N4003G
6105	4822 130 34173	BZX79-B5V6
6106	4822 130 30621	1N4148
6107	4822 130 30621	1N4148
6108	4822 130 30621	1N4148
6109	4822 130 30621	1N4148
6110	4822 130 30621	1N4148
6111	4822 130 30621	1N4148

TRANSISTORS

7103 ©	4822 130 60511	BC847B
7104 ©	4822 130 60511	BC847B
7105 ©	4822 130 60511	BC847B
7106 ©	4822 130 60511	BC847B
7107 ©	4822 130 60511	BC847B

INTEGRATED CIRCUITS

7101 ©	4822 209 15449	74HC4094D, SHIFT REGISTER
7102 ©	3103 308 84440	TMP88CU74YF M1 MC77 (µP)
7900 ©	9352 679 67118	SAA6579T/V1/M4 (RDS Decoder)
7901 ©	9322 145 26668	M24C02-WMN6, EEPROM

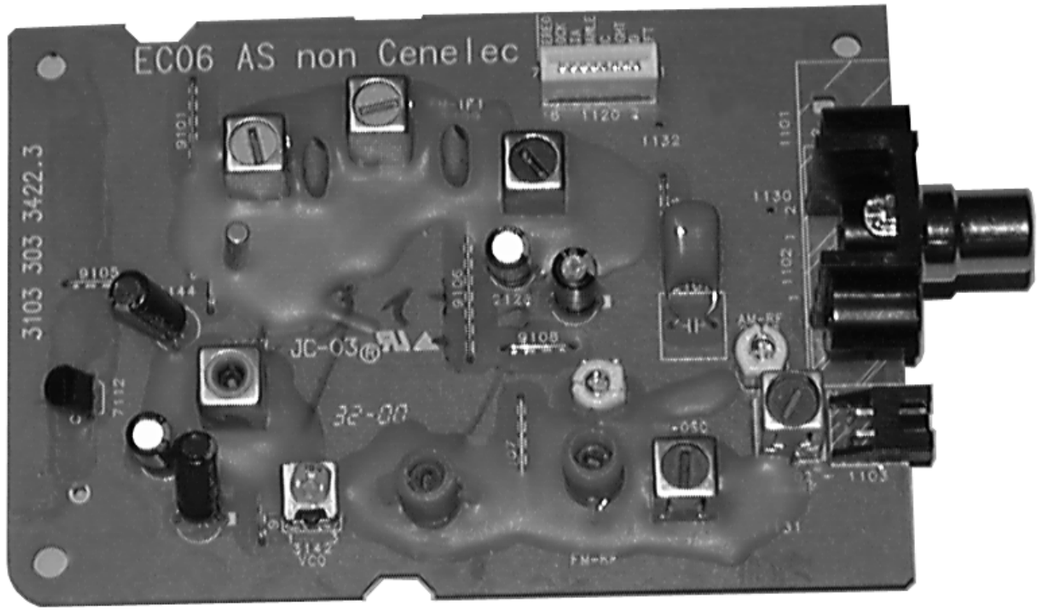

ECO6 Tuner Board

version: ***SYSTEMS non-CENELEC***

TABLE OF CONTENTS

Blockdiagram 7A-1
Schematic Diagram.....7A-2
Component Layout.....7A-3
Adjustment table 7A-3
Electrical Partslist.....7A-4

7A-1

BLOCK DIAGRAM

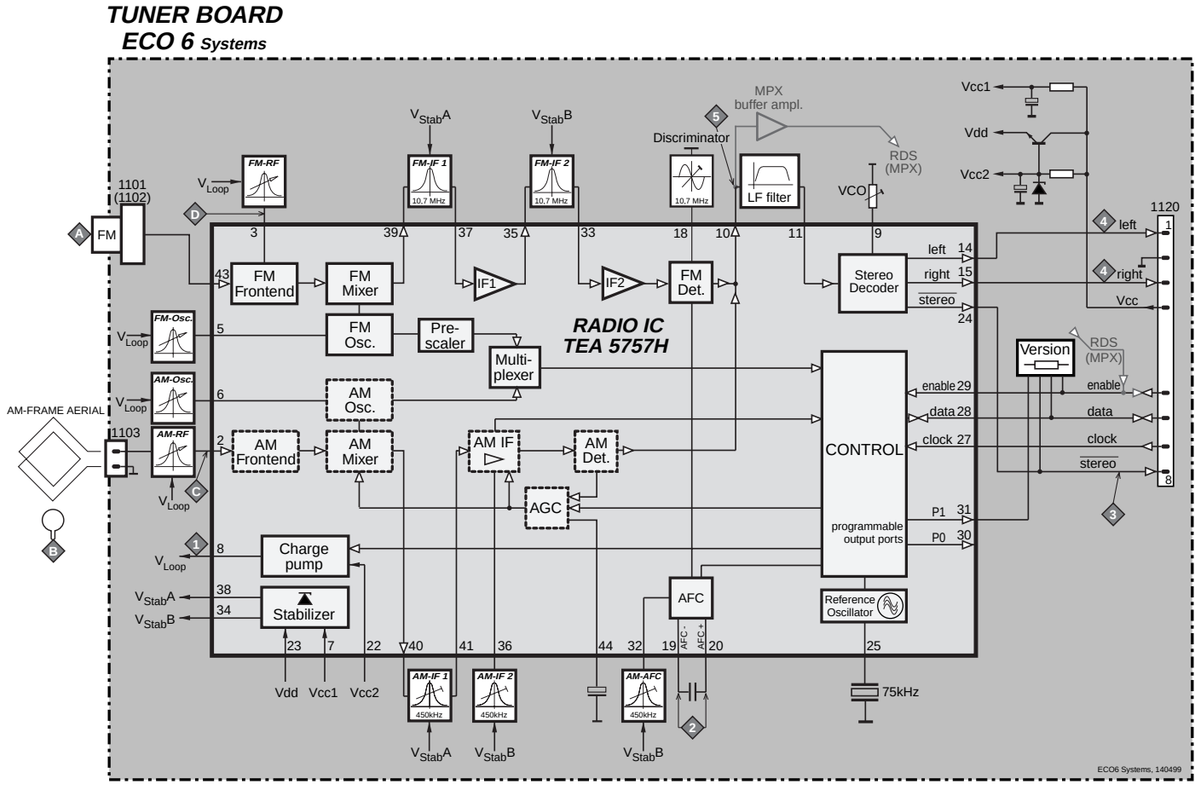

7A-2

TUNER BOARD ECO6 / SYSTEMS NON CENELEC

VERSION PROGRAMMING COMPONENTS

VERSION	6120	3156	3157	3170	7111
/00 /02 FM/MW/LW	X				
/00 /02 FM/MW		X	X		X
/01 FM/MW		X		X	
/14 FM-OIRT/MW			X		
/17 FM/AM	X				
/06 FM-Japan/AM				X	X

X component mounted

VERSION DETECTION

LEGEND

ⓟ...for provision only
USA ... for USA version only
E-EU ... for East European version only
J ... for Japanese version only

...V FM mode stereo
...V MW mode
...V LW mode
EVM
voltages measured while set is tuned to a strong transmitter

Signal path
FM
AM
MPX (Audio Frequency)
AF - left/right

ECO6 Sys-non Cenelec, 000911

1101 A1
1102 B1
1103 F2
1120 E14
1130 A2
1131 B2
1132 G13
2101 B3
2102 B1
2103 C7
2104 B3
2105 A2
2106 F3
2107 F4
2119 H6
2120 G6
2124 H6
2125 H6
2126 F7
2127 E7
2128 C8
2129 C7
2130 F11
2131 G8
2132 G8
2133 G8
2134 H8
2135 H9
2136 G14
2137 G13
2138 F9
2139 G9
2140 G9
2141 F10
2143 G12
2144 G11
2145 F12
2146 E12
2147 E12
2148 E12
2149 H7
2150 A10
2152 E4
2153 E5
2154 D5
2155 D5
2159 F6
2161 C11
2163 D11
2164 F10
2165 C7
2166 E11
2167 E11
2169 H8
3101 E4
3102 D4
3103 C6
3104 A7
3105 B6
3132 G5
3134 H6
3141 E7
3142 E7
3143 G7
3144 H7
3145 F8
3146 G13
3152 G14
3153 G13
3154 G11
3155 G11
3156 C12
3157 C12
3158 E13
3159 D13
3160 D12
3161 D13
3167 F12
3168 F11
3169 E11
3170 C12
3172 G12
3176 G7
3181 E6
5102 F2
5109 B9
5110 B10
5111 A8
5112 A11
5114 B11
5119 G9
5121 E11
5123 G5
5130 E5
5131 C6
6103 B2
6105-1 F3
6105-2 G5
6106 C3
6107 G13
6120 C13
6130 E5
6131 D5
7101 C8
7102 C6
7103 H7
7111 C13
7112 G12
T102 B2
T103 B2
T105 F2
T106 F2
T109 B6
T110 F5
T111 F4
T112 F7
T113 A8
T114 B10
T115 A8
T116 F10
T117 G13
T118 G11
T120 F13
T121 F13
T122 F13
T123 E13
T124 G14
T125 F14
T126 F13
T127 F13
T128 D7
T140 F11
T141 F10
T142 F10

7A-3

These assembly drawings show a summary of all possible versions.
For components used in a specific version see schematic diagram respectively partslist.

TUNER ADJUSTMENT TABLE (ECO6 FM/MW- and FM/MW/LW - versions with AM-frame aerial)

Waverange	Input frequency	Input	Tuned to	Adjust	Output	Scope/Voltmeter
VARICAP ALIGNMENT						
FM 87.5 - 108MHz (65.81 - 74, 87.5 - 108MHz)			108MHz	5130	1	8V ±0.2V
			87.5MHz (65.81MHz)	check		4.3V ±0.5V [5] (1.2V ±0.5V)
MW FM/AM-version, 10kHz grid 530 - 1700kHz			1700kHz	5123		8V ±0.2V
			530kHz	check		1.1V ±0.4V
FM/MW-version, 9kHz grid 531 - 1602kHz			1602kHz	5123		6.9V ±0.2V
			531kHz	check		1.1V ±0.4V
LW 153 - 279kHz			279kHz	5122		8V ±0.2V
			153kHz	check		1.1V ±0.4V
MW FM/MW/LW- version, 9kHz grid 531 - 1602kHz			1602kHz	5123		8V ±0.2V
			531kHz	check		1.1V ±0.4V
FM IF						
FM	10.7MHz, 45mV continuous wave	D	IC 7101 21 — shortcircuit to block AFC — 2141	5119	2	0 ± 3 mV DC
FM RF						
FM 87.5 - 108MHz (65.81 - 74, 87.5 - 108MHz)	108MHz	A mod=1kHz Δf=±22.5kHz	108MHz	2155	4	MAX ↕
	87.5MHz (65.81MHz)		87.5MHz (65.81MHz)	5131		
VCO						
FM	98MHz, 1mV continuous wave	A	98MHz	3142	3	152kHz ±1kHz [1]
AM IF						
MW	450kHz connect pin 6 of IC 7101 (AM Osc.) with 3.3kΩ to Vcc	C Δf=±10kHz V_{RF} = 0.5mV (as low as possible)	IC 7101 36 — 100nF — 220R	5111	5	max. / f_o / symmetric
			IC 7101 40 — 100nF — 220R — see remark [2]	5112		
AM AFC **MW**		C continuous wave V_{RF} = 2mV		5114	2	0 ± 2 mV DC
AM RF [3]						
MW [4] FM/MW/LW- and FM/MW-version (9kHz grid) 531 - 1602kHz	1494kHz	B Δf = ±30kHz V_{RF} as low as possible	1494kHz	2106	5	max. / f_o / symmetric ↕
	558kHz		558kHz	5102		
LW	198kHz		198kHz	5103		
MW FM/AM-version, 10kHz grid 530 - 1700kHz	1500kHz		1500kHz	2106		
	560kHz		560kHz	5102		

ECO6, Sys + PA with frame aerial, 170501

Use Service Testprogram. By selecting the TUNER TEST test frequencies will be stored as preset frequencies automatically.

[1] If sensitivity of frequency counter is too low adjust to max. channel separation (input signal: stereo left 90% + 9%, adjust output on right channel to minimum)

[2] RC network serves for damping the IF-filter while adjusting the other one.

[3] For AM RF adjustments the original frame antenna has to be used !

[4] MW has to be aligned before LW.

↕ Repeat

[5] 1.7V ±0.5V when alternative varicap. BB804 is used on pos. 6130, 6131

Electrical Partslist *ECO6* *SYSTEMS NON-CENELEC*

7A-4

MISCELLANEOUS

1101	2422 015 19376	SOCKET 2P CLICKFIT	USA only
1102	4822 267 10283	SOCKET COAX, IEC 75Ω	not USA
1103	4822 265 31184	JST CONNECTOR 2 POLE	
1120	4822 265 11515	FFC SOCKET, 8P	

CAPACITORS

2101 ©	4822 126 13692	47pF	1%	63V	
2102 ©	4822 126 13838	100nF	10%	50V	not USA
2103 ©	5322 122 31647	1nF	10%	63V	
2104 ©	5322 122 32531	100pF	5%	50V	
2105 ©	4822 126 13838	100nF	10%	50V	USA only
2106	2020 800 00191	3-11pF TRIMCAP.,N450			
2107	4822 121 51319	1µF	20%	50V	
2120 ©	4822 126 13689	18pF	1%	63V	
2124 ©	5322 122 32654	22nF	10%	63V	
2125 ©	2020 552 96199	560pF	1%	50V	
2126 ©	5322 122 31863	330pF	5%	50V	
2127 ©	4822 126 14076	220nF	20%	25V	
2128	4822 124 40248	10µF	20%	63V	
2129	4822 124 41584	100µF	20%	10V	
2130 ©	5322 122 32654	22nF	10%	63V	
2131 ©	4822 126 13482	470nF	20%	16V	
2132 ©	4822 126 13482	470nF	20%	16V	
2133	4822 124 21913	1µF	20%	63V	
2134 ©	4822 126 13188	15nF	5%	63V	not USA
2134 ©	5322 122 32654	22nF	10%	63V	USA only
2135 ©	4822 126 13188	15nF	5%	63V	not USA
2135 ©	5322 122 32654	22nF	10%	63V	USA only
2136 ©	4822 126 14076	220nF	20%	25V	
2137 ©	4822 126 14076	220nF	20%	25V	
2138	4822 124 22652	2,2µF	20%	50V	
2139 ©	4822 126 14236	15pF	5%	50V	
2140 ©	4822 126 13695	82pF	1%	63V	
2141 ©	4822 126 13838	100nF	10%	50V	
2143 ©	4822 126 14076	220nF	20%	25V	
2144	4822 124 21913	1µF	20%	63V	
2145 ©	4822 122 33575	220pF	5%	50V	
2146 ©	4822 122 33575	220pF	5%	50V	
2147 ©	4822 122 33575	220pF	5%	50V	
2148 ©	4822 122 33127	2,2nF	10%	63V	
2149 ©	5322 122 32659	33pF	5%	50V	RDS only
2150 ©	4822 126 13838	100nF	10%	50V	
2152 ©	4822 126 12105	33nF	5%	63V	not for East Europe
2152 ©	5322 116 80853	560pF	5%	63V	for East Europe only
2153 ©	4822 126 13486	15pF	2%	63V	not for East Europe
2153 ©	4822 122 33926	12pF	2%	50V	for East Europe only
2155	2020 800 00191	3-11pF TRIMCAP.,N450			
2159 ©	5322 122 32659	33pF	5%	50V	
2164 ©	4822 126 13482	470nF	20%	16V	
2165 ©	4822 126 13838	100nF	10%	50V	
2166 ©	5322 122 31647	1nF	10%	63V	
2167 ©	4822 122 33926	12pF	5%	50V	
2169 ©	4822 122 33127	2,2nF	10%	63V	RDS only

RESISTORS

3101 ©	4822 051 20333	33kΩ	5%	0,1W	
3102 ©	4822 117 10837	100kΩ	1%	0,1W	
3103 ©	4822 051 20822	8,2kΩ	5%	0,1W	
3104 ©	4822 117 13577	330Ω	1%	0,1W	
3105 ©	4822 117 11503	220Ω	5%	0,1W	
3132 ©	4822 051 20479	47Ω	5%	0,1W	
3134 ©	4822 051 20223	22kΩ	5%	0,1W	
3141 ©	4822 117 11148	56kΩ	1%	0,1W	
3142	4822 100 12159	TRIMPOT. 100kΩ			

RESISTORS

3143 ©	4822 051 20223	22kΩ	5%	0,1W	RDS only
3144 ©	4822 051 10102	1kΩ	2%	0,25W	RDS only
3145©	4822 117 11449	2,2kΩ	1%	0,1W	
3146 ©	4822 051 20229	22Ω	5%	0,1W	
3152 ©	4822 051 20471	470Ω	5%	0,1W	
3153 ©	4822 051 20471	470Ω	5%	0,1W	
3154 ©	4822 117 13577	330Ω	1%	0,1W	
3155 ©	4822 117 11503	220Ω	5%	0,1W	
3156 ©	4822 117 10837	100kΩ	1%	0,1W	
3157 ©	4822 117 10837	100kΩ	1%	0,1W	
3158 ©	4822 051 20471	470Ω	5%	0,1W	
3159 ©	4822 051 20471	470Ω	5%	0,1W	
3160 ©	4822 051 20471	470Ω	5%	0,1W	
3161 ©	4822 051 20223	22kΩ	5%	0,1W	
3167 ©	4822 051 20121	120Ω	5%	0,1W	
3168 ©	4822 051 20121	120Ω	5%	0,1W	
3169 ©	4822 051 20154	150kΩ	5%	0,1W	
3170 ©	4822 117 10837	100kΩ	1%	0,1W	
3172 ©	4822 051 20562	5,6kΩ	5%	0,1W	
3176 ©	4822 051 20333	33kΩ	5%	0,1W	RDS only
3181 ©	4822 051 10102	1kΩ	2%	0,25W	
4103 ©	4822 051 20008	CHIP JUMPER 0805			
4106 ©	4822 051 20008	CHIP JUMPER 0805			
4107 ©	4822 051 20008	CHIP JUMPER 0805			
4108 ©	4822 051 20008	CHIP JUMPER 0805			

COILS

5102	4822 157 71634	RF-COIL MW
5109	4822 242 70665	FM-IF FILTER 10,7MHz
5110	4822 242 70665	FM-IF FILTER 10,7MHz
5111	2422 549 44023	AM-IF FILTER 450kHz
5112	4822 157 70302	AM-IF FILTER 450kHz
5114	4822 157 70302	AM-IF FILTER 450kHz
5119	4822 157 11443	DISCRIMINATOR COIL
5121	4822 242 10261	QUARTZ 75kHz
5123	2422 549 44108	RF-COIL, AM-OSCILLATOR
5130	4822 157 11843	RF COIL 1,5 TURNS
5131	4822 157 11843	RF COIL 1,5 TURNS

DIODES

6103 ©	5322 130 34337	BAV99	
6105 ©	4822 130 83075	HN1V02H	
6106 ©	4822 130 83757	BAS216	
6107 ©	9340 386 90115	BZX284-C11	
6120 ©	4822 130 83757	BAS216	
6130 ©	4822 130 82833	1SV228	
6131 ©	4822 130 82833	1SV228	

TRANSISTORS

7102	4822 130 42131	BF550	
7103 ©	5322 130 42756	BC857C	RDS only
7111 ©	5322 130 42755	BC847C	
7112	4822 130 44503	BC547C	

INTEGRATED CIRCUITS

7101 ©	9351 740 80557	TEA5757H/V1, RADIO IC

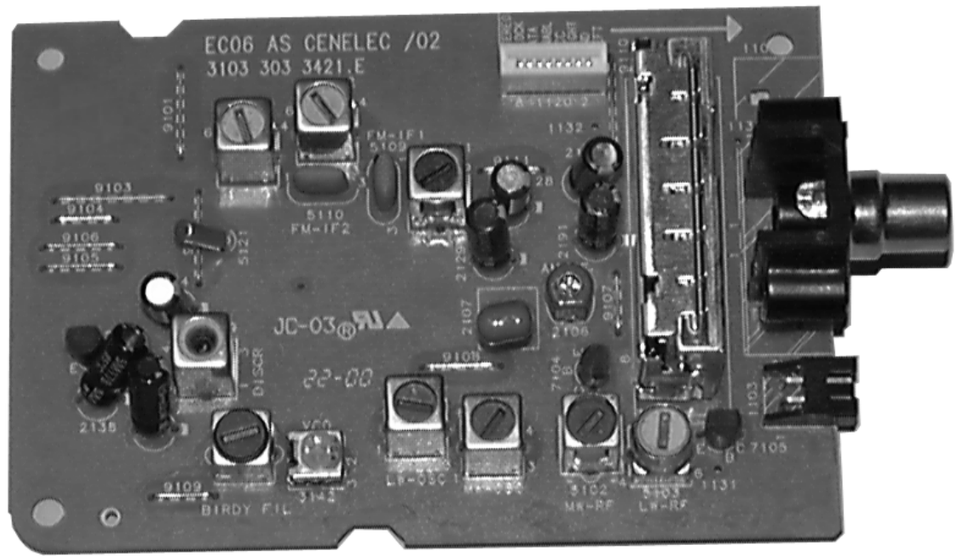

ECO6 Tuner Board

version: ***SYSTEMS CENELEC***

TABLE OF CONTENTS

Blockdiagram 7B-1
Schematic Diagram.....7B-2
Component Layout.....7B-3
Adjustment table 7B-3
Electrical Partslist.....7B-4

7B-1

BLOCK DIAGRAM

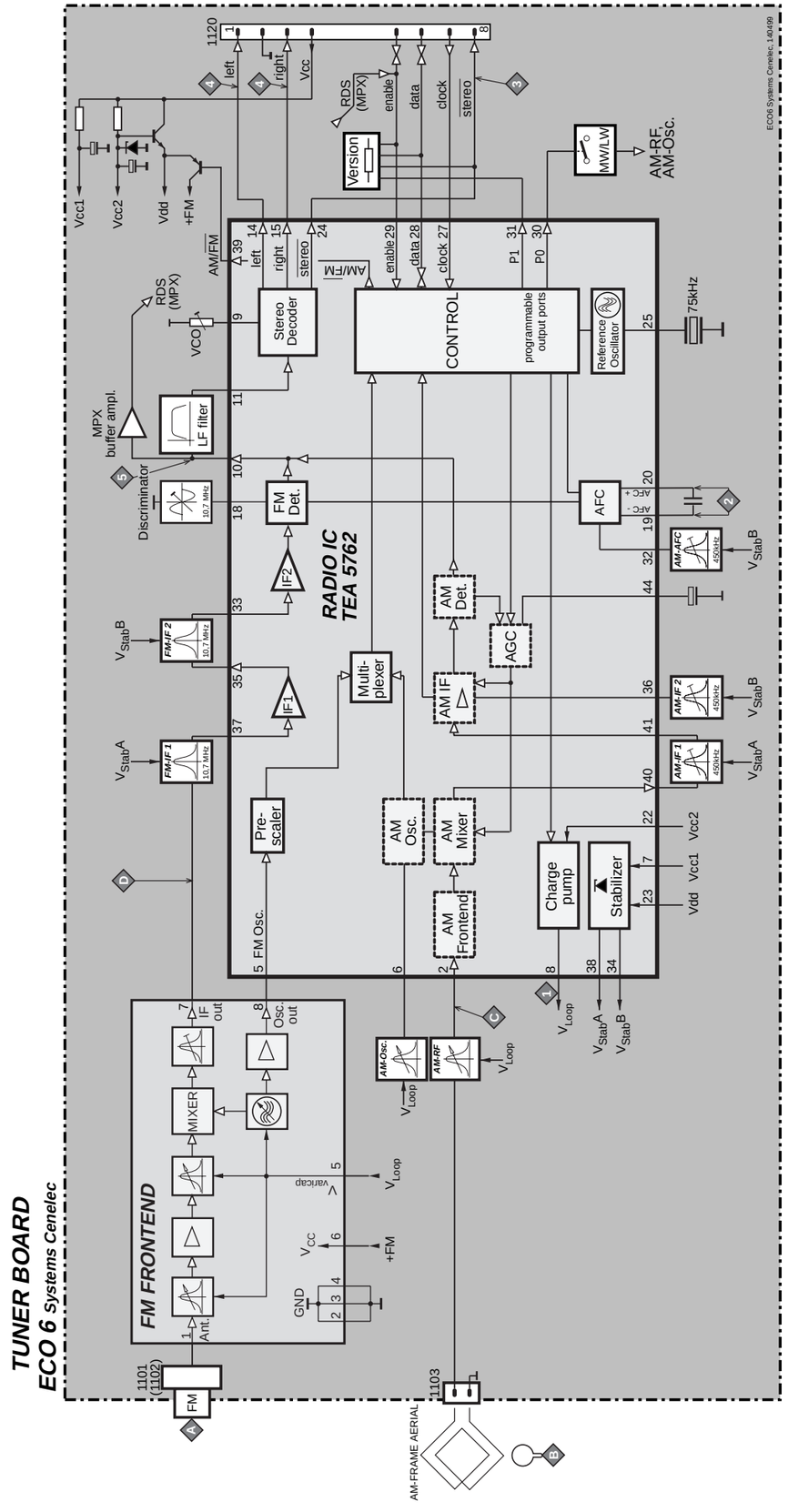

7B-2

TUNER BOARD ECO6 / SYSTEMS-CENELEC

VERSION PROGRAMMING COMPONENTS

VERSION	6120	3156	3157	3170	7111
/00 /02 FM/MW/LW	☒				
/00 /02 FM/MW		☒	☒	☒	☒
/01 FM/MW		☒	☒	☒	☒
/14 FM-OIRT/MW		☒	☒	☒	☒
/17 FM/AM		☒	☒	☒	☒

☒ component mounted

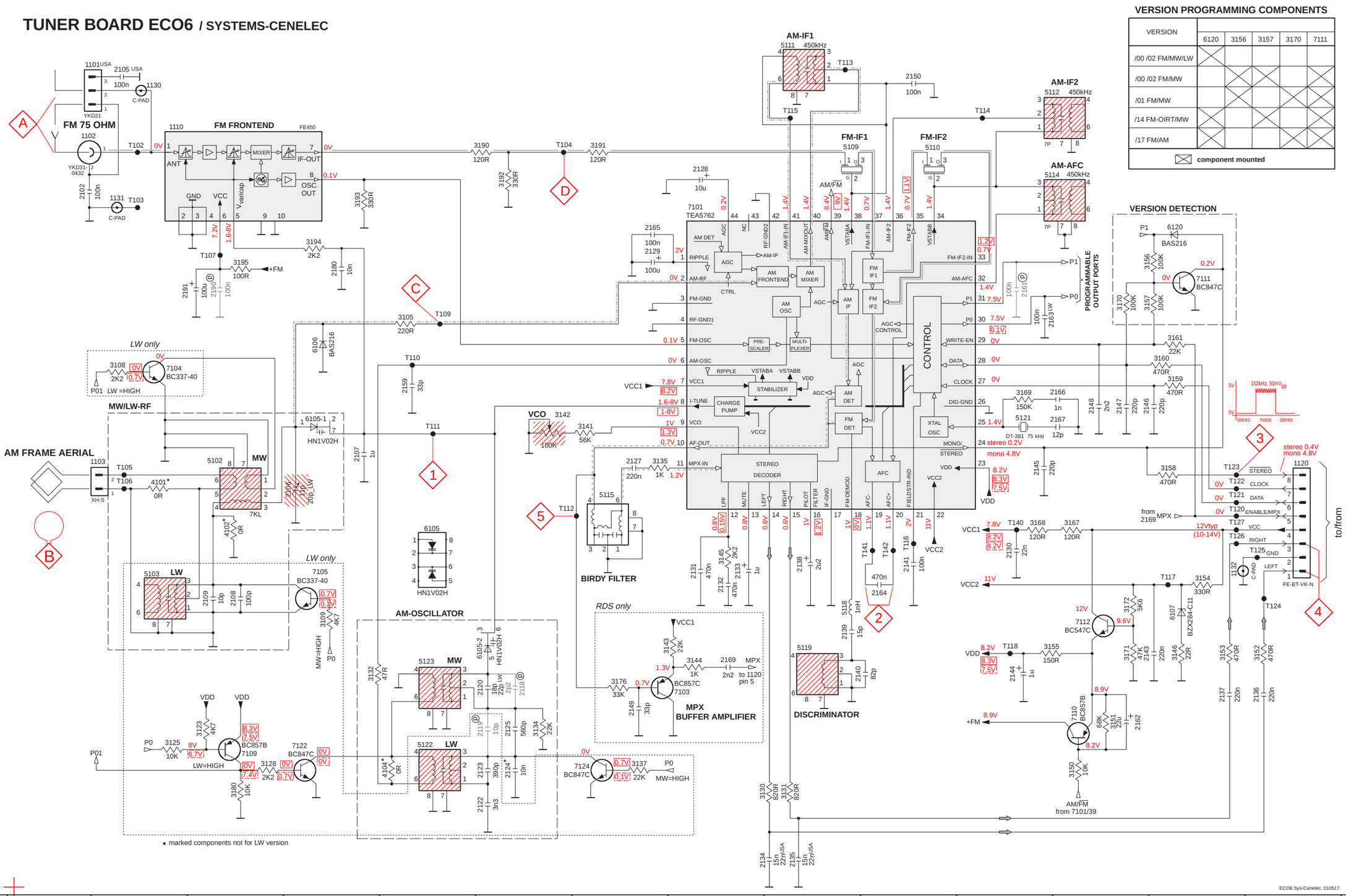

* marked components not for LW version

LEGEND

* ... only assembled in FM/AM-version
(p)...for provision only
USA ... for USA version only
LW ... for LW version only

SMD jumper 41xx 0R

...V FM mode stereo
...V MW mode
...V LW mode
voltages measured while set is tuned to a strong transmitter

Signal path
FM
AM
MPX (Audio Frequency)
AF - left/right

1101 A2	5121 E11	2102 B1	7101 C8
1102 B1	5122 H5	2105 A2	7103 H8
1103 E2	5123 G5	2106 E3	7104 D2
1110 B2	6105-1 E4	2107 E4	7105 F4
1120 E14	6105-2 G6	2108 G3	7109 H3
1130 A2	6106 D4	2109 G3	7110 H12
1131 C2	6107 G13	2118 H6	7111 C13
1132 F13	6120 C13	2119 H6	7112 G12
		2120 H6	7122 H4
		2122 I6	7124 H7
		2123 H6	T102 B2
		2124 H6	T103 B2
		2125 H6	T104 B6
		2127 E7	T105 E2
		2128 B8	T106 E2
		2129 C7	T107 C3
		2130 F11	T109 D5
		2131 F8	T110 D5
		2132 F8	T111 E5
		2133 F8	T112 F7
		2134 I8	T113 A9
		2135 I9	T114 B11
		2136 H14	T116 F10
		2137 H13	T117 F13
		2138 F9	T118 G11
		2139 G9	T120 F13
		2140 G9	T121 F13
		2141 F10	T122 E13
		2143 G12	T123 E13
		2144 E11	T124 G14
		2145 E11	T125 F14
		2146 E12	T126 F13
		2147 E12	T127 F13
		2148 E12	T140 F11
		2149 H7	T141 F10
		2150 A10	T142 F10
		2159 D5	
		2161 C11	
		2162 H12	
		2163 D11	
		2164 G10	
		2165 C7	
		2166 E11	
		2167 E11	
		2169 G8	
		2180 C4	
		2190 C3	
		2191 C3	
		3105 D5	
		3108 D2	
		3109 G4	
		3123 H3	
		3125 H2	
		3128 H3	
		3130 I9	
		3131 I9	
		3132 G4	
		3134 H6	
		3135 E7	
		3137 H7	
		3141 E7	
		3142 E6	
		3143 G7	
		3144 G8	
		3145 F8	
		3146 G13	
		3150 H12	
		3151 H12	
		3152 G14	
		3153 G13	
		3154 F13	
		3155 G12	
		3156 C12	
		3157 D12	
		3158 E13	
		3159 D13	
		3160 D13	
		3161 D13	
		3167 F12	
		3168 F11	
		3169 E11	
		3170 D12	
		3171 G12	
		3172 G12	
		3176 H7	
		3180 I3	
		3190 B6	
		3191 B7	
		3192 B6	
		3193 B4	
		3194 C4	
		3195 C3	
		4101 E2	
		4102 F3	
		4104 H5	
		5102 E3	
		5103 F2	
		5109 B9	
		5110 B10	
		5111 A9	
		5112 A11	
		5114 B11	
		5115 E7	
		5118 G9	
		5119 G9	

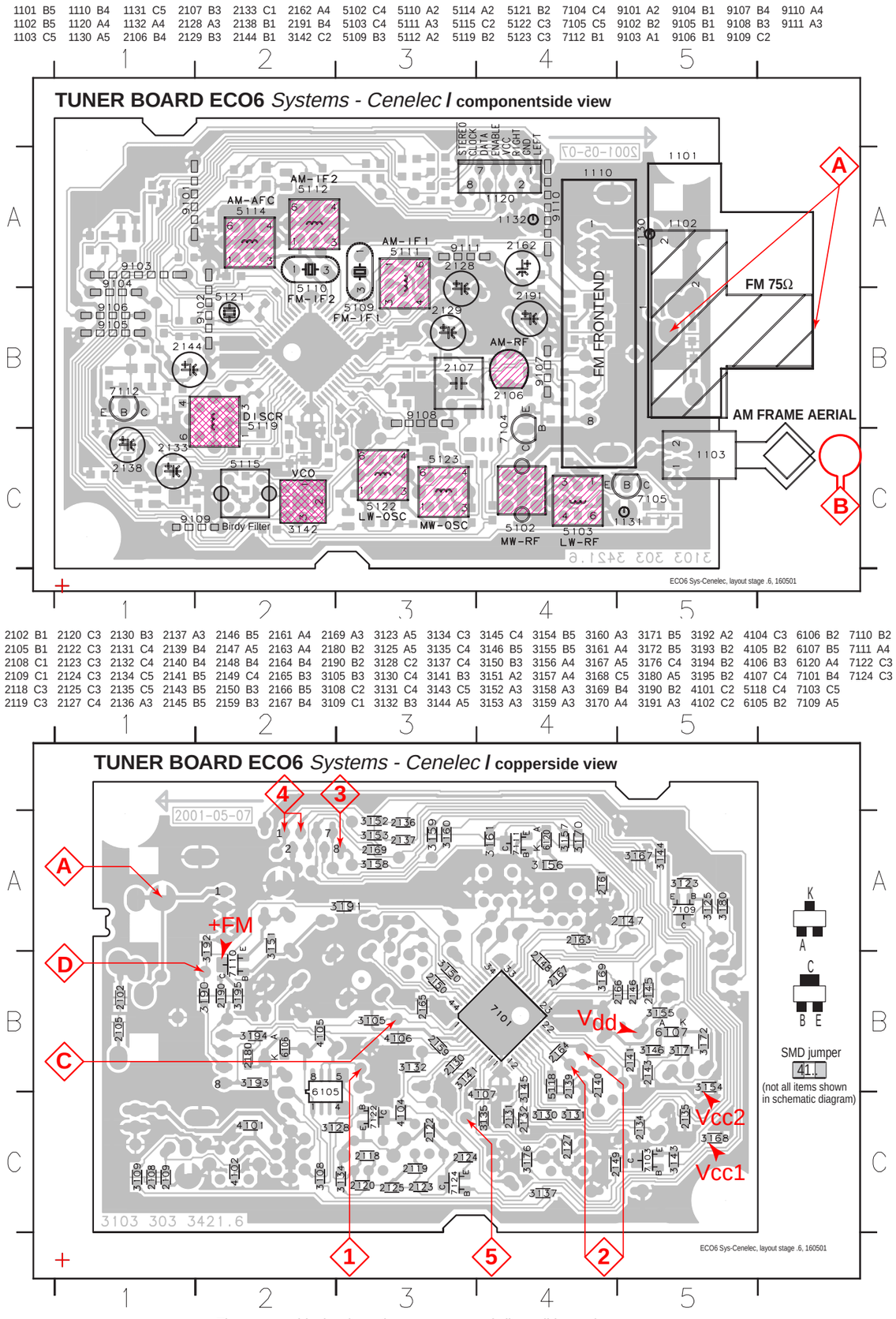

These assembly drawings show a summary of all possible versions.
For components used in a specific version see schematic diagram respectively partslist.

7B-3

TUNER ADJUSTMENT TABLE (**ECO6 Cenelec** FM/MW - and FM/MW/LW - versions with AM-frame aerial)

Waverange	Input frequency	Input	Tuned to	Adjust	Output	Scope/Voltmeter
VARICAP ALIGNMENT						
FM 87.5 - 108MHz (50kHz grid)			108MHz	check	1	8V ±1.2V
			87.5MHz	check		1.6V ±0.5V
MW 531 - 1602kHz (9kHz grid)			1602kHz	5123		8V ±0.2V 3-band 6.9V ±0.2V 2-band
			531kHz	check		1.1V ±0.4V
LW 153 - 279kHz (3kHz grid)			279kHz	5122		8V ±0.2V
			153kHz	check		1.1V ±0.4V
FM - IF						
FM	10.7MHz, 45mV continuous wave	D	IC 7101 pin 21 shortcircuit to block AFC 2141	5119	2	0mV ±3mV
FM - VCO						
FM	98MHz, 1mV continuous wave	A	98MHz	3142	3	152kHz ±1kHz 1)
FM RF (channel separation)	Note: The FM-frontend unit has already been adjusted by the factory and needs therefore no further adjustments for service purposes.					
FM	98MHz, 1mV 90% Left + 9% pilot mod=1kHz	A	98MHz	IF coil inside FM frontend 1110	4	right channel min.
AM IF						
MW	450kHz connect pin 6 of IC 7101 (AM Osc.) with 3.3kΩ to Vcc	C Δf = ±10kHz V_{RF} = 0.5mV (as low as possible)	IC 7101 pin 36 220R 100nF	5111	5	max. f_o symmetric
			IC 7101 pin 40 220R 100nF see remark 2)	5112		
AM AFC **MW**		C continuous wave V_{RF} = 2mV		5114	2	0mV ±2mV
AM RF 3)						
MW	1494kHz	B Δf = ±30kHz V_{RF} as low as possible	1494kHz	2106	5	max. f_o symmetric
	558kHz		558kHz	5102		
LW	198kHz		198kHz	5103		

ECO6 Sys Cenelec, 190599

Use Service Testprogram. By selecting the TUNER TEST test frequencies will be stored as preset frequencies automatically.

1) If sensitivity of frequency counter is too low adjust to max. channel separation (input signal: stereo left 90% + 9%, adjust output on right channel to minimum)

2) RC network serves for damping the IF-filter while adjusting the other one.

3) For AM RF adjustments the original frame antenna has to be used! MW has to be aligned before LW.

↕ Repeat

Electrical Partslist *ECO6* SYSTEMS-CENELEC

7B-4

MISCELLANEOUS

1101	2422 015 19376	SOCKET CLICKFIT 2P	USA only
1102	4822 267 10283	SOCKET COAX, IEC 75Ω	not USA
1103	4822 265 31184	JST CONNECTOR, 2 POLE	
1110	2422 542 90071	FM FRONTEND	
1120	4822 265 11515	FFC SOCKET, 8P	

CAPACITORS

2102 ©	4822 126 13838	100nF	10%	50V	not USA
2105 ©	4822 126 13838	100nF	10%	50V	USA only
2106	2020 800 00204	TRIMCAP. 4,2 - 20pF, N750			LW only
2106	2020 800 00191	TRIMCAP. 3 - 11pF, N450			FM/AM only
2107	4822 121 51319	1µF	20%	50V	
2108 ©	5322 122 32531	100pF	5%	50V	LW only
2109 ©	5322 122 32448	10pF	5%	50V	LW only
2120 ©	4822 126 13689	18pF	1%	63V	FM/AM only
2120 ©	5322 122 32658	22pF	5%	50V	LW only
2122 ©	4822 122 33891	3,3nF	10%	63V	LW only
2123 ©	2020 552 93494	390pF	1%	50V	LW only
2124 ©	4822 122 33177	10nF	20%	50V	FM/AM only
2125 ©	2020 552 96199	560pF	1%	50V	
2127 ©	4822 126 14076	220nF	20%	25V	
2128	4822 124 40248	10µF	20%	63V	
2129	4822 124 41584	100µF	20%	10V	
2130 ©	5322 122 32654	22nF	10%	63V	
2131 ©	4822 126 13482	470nF	20%	16V	
2132 ©	4822 126 13482	470nF	20%	16V	
2133	4822 124 21913	1µF	20%	63V	
2134 ©	3198 017 31530	15nF	10%	50V	not USA
2134 ©	5322 122 32654	22nF	10%	63V	USA only
2135 ©	3198 017 31530	15nF	10%	50V	not USA
2135 ©	3198 017 32230	22nF	10%	25V	USA only
2136 ©	4822 126 14076	220nF	20%	25V	
2137 ©	4822 126 14076	220nF	20%	25V	
2138	4822 124 22652	2,2µF	20%	50V	
2139 ©	4822 126 14236	15pF	5%	50V	
2140 ©	4822 126 13695	82pF	1%	63V	
2141 ©	4822 126 13838	100nF	10%	50V	
2143 ©	4822 126 14076	220nF	20%	25V	
2144	4822 124 21913	1µF	20%	63V	
2145 ©	4822 122 33575	220pF	5%	50V	
2146 ©	4822 122 33575	220pF	5%	50V	
2147 ©	4822 122 33575	220pF	5%	50V	
2148 ©	4822 122 33127	2,2nF	10%	63V	
2149 ©	5322 122 32659	33pF	5%	50V	RDS only
2150 ©	4822 126 13838	100nF	10%	50V	
2159 ©	5322 122 31151	22µF	20%	50V	
2163 ©	4822 126 13838	100nF	10%	50V	LW only
2164 ©	4822 126 13482	470nF	20%	16V	
2165 ©	4822 126 13838	100nF	10%	50V	
2166 ©	5322 122 31647	1nF	10%	63V	
2167 ©	4822 122 33926	12pF	5%	50V	
2169 ©	4822 122 33127	2,2nF	10%	63V	RDS only
2180 ©	3198 017 31030	10nF	10%	50V	
2190 ©	4822 126 13838	100nF	10%	50V	
2191	4822 124 40178	100µF	20%	10V	

RESISTORS

3105 ©	4822 117 11503	220Ω	5%	0,1W	
3108 ©	4822 117 11449	2,2kΩ	1%	0,1W	LW only
3109 ©	4822 051 20472	4,7kΩ	5%	0,1W	LW only
3123 ©	4822 051 20472	4,7kΩ	5%	0,1W	LW only
3125 ©	4822 117 10833	10kΩ	1%	0,1W	LW only
3128 ©	4822 117 11449	2,2kΩ	1%	0,1W	LW only
3130 ©	3198 021 38210	820Ω	5%	0,06W	
3131 ©	3198 021 38210	820Ω	5%	0,06W	
3132 ©	4822 051 20479	47Ω	5%	0,1W	
3134 ©	4822 051 20223	22kΩ	5%	0,1W	
3135 ©	3198 021 31020	1kΩ	5%	0,06W	
3137 ©	4822 051 20223	22kΩ	5%	0,1W	LW only
3141 ©	4822 117 11148	56kΩ	1%	0,1W	
3142	4822 100 12159	TRIMPOT. 100kΩ			
3143 ©	4822 051 20223	22kΩ	5%	0,1W	RDS only
3144 ©	4822 051 10102	1kΩ	2%	0,25W	RDS only
3145 ©	4822 117 11449	2,2kΩ	1%	0,1W	
3146 ©	4822 051 20229	22Ω	5%	0,1W	
3150 ©	4822 117 10833	10kΩ	1%	0,1W	
3151 ©	4822 051 20683	68kΩ	5%	0,1W	
3152 ©	4822 051 20471	470Ω	5%	0,1W	
3153 ©	4822 051 20471	470Ω	5%	0,1W	
3154 ©	4822 117 13577	330Ω	1%	0,1W	
3155 ©	4822 117 10353	150Ω	5%	0,1W	
3156 ©	4822 117 10837	100kΩ	1%	0,1W	
3157 ©	4822 117 10837	100kΩ	1%	0,1W	
3158 ©	4822 051 20471	470Ω	5%	0,1W	
3159 ©	4822 051 20471	470Ω	5%	0,1W	
3160 ©	4822 051 20471	470Ω	5%	0,1W	
3161 ©	4822 051 20223	22kΩ	5%	0,1W	
3167 ©	4822 051 20121	120Ω	5%	0,1W	
3168 ©	4822 051 20121	120Ω	5%	0,1W	
3169 ©	4822 051 20154	150kΩ	5%	0,1W	
3170 ©	4822 117 10837	100kΩ	1%	0,1W	
3171 ©	4822 117 10834	47kΩ	1%	0,1W	
3172 ©	4822 051 20562	5,6kΩ	5%	0,1W	
3176 ©	4822 051 20333	33kΩ	5%	0,1W	RDS only
3180 ©	4822 117 10833	10kΩ	1%	0,1W	LW only
3190 ©	4822 051 20121	120Ω	5%	0,1W	
3191 ©	4822 051 20121	120Ω	5%	0,1W	
3192 ©	4822 117 13577	330Ω	1%	0,1W	
3193 ©	4822 117 13577	330Ω	1%	0,1W	
3194 ©	4822 117 11449	2,2kΩ	1%	0,1W	
3195 ©	4822 051 20101	100Ω	5%	0,1W	
4101 ©	4822 051 20008	CHIP JUMPER 0805			FM/AM only
4102 ©	4822 051 20008	CHIP JUMPER 0805			FM/AM only
4104 ©	4822 051 20008	CHIP JUMPER 0805			FM/AM only
4105 ©	4822 051 20008	CHIP JUMPER 0805			
4106 ©	4822 051 20008	CHIP JUMPER 0805			
4107 ©	4822 051 20008	CHIP JUMPER 0805			

COILS

5102	4822 157 71634	RF-COIL MW	
5103	2422 549 44107	RF-COIL LW	LW only
5109	4822 157 71639	FM-IF FILTER 10,7MHz	
5110	4822 242 70665	FM-IF FILTER 10,7MHz	
5111	2422 549 44023	AM-IF FILTER 450kHz	
5112	4822 157 70302	AM-IF FILTER 450kHz	
5114	4822 157 70302	AM-IF FILTER 450kHz	
5115	4822 157 71636	ANTI BIRDY FILTER	
5118 ©	2422 535 95881	100nH	
5119	4822 157 11443	DISCRIMINATOR COIL	
5121	4822 242 10261	QUARTZ 75kHz	
5122	2422 549 44108	RF-COIL, LW-OSCILLATOR	LW only
5123	2422 549 44108	RF-COIL, MW-OSCILLATOR	

DIODES

6105 ©	4822 130 83075	HN1V02H	
6106 ©	4822 130 83757	BAS216	
6107 ©	9340 386 90115	BZX284-C11	
6120 ©	4822 130 83757	BAS216	

TRANSISTORS

7103 ©	5322 130 42756	BC857C	RDS only
7104	9322 003 64676	TBC337-40	LW only
7105	9322 003 64676	TBC337-40	LW only
7109 ©	4822 130 60373	BC856B	LW only
7110 ©	4822 130 60373	BC856B	
7111 ©	5322 130 42755	BC847C	
7112	4822 130 44503	BC547C	
7122 ©	5322 130 42755	BC847C	LW only
7124 ©	5322 130 42755	BC847C	LW only

INTEGRATED CIRCUITS

7101	4822 209 90315	TEA5762H/V1, RADIO IC

FRONT CONTROL BOARD

TABLE OF CONTENTS

Standby (Power) part 8-1
Key Control (KEYB. 1) & Lightwash parts 8-2
Headphone, Jog (Volume) and CDC Key parts 8-3
Electrical parts list 8-4

STANDBY (POWER) PART - CIRCUIT & LAYOUTS

1400 A1	2401 E3	2404 C3	3400 A3	3403 B4	6400 C4
1402 A3	2402 E3	2405 C4	3401 A3	3404 E4	7400 D1
1405 A2	2403 B3	2406 C4	3402 C3	3405 E4	7402 C4

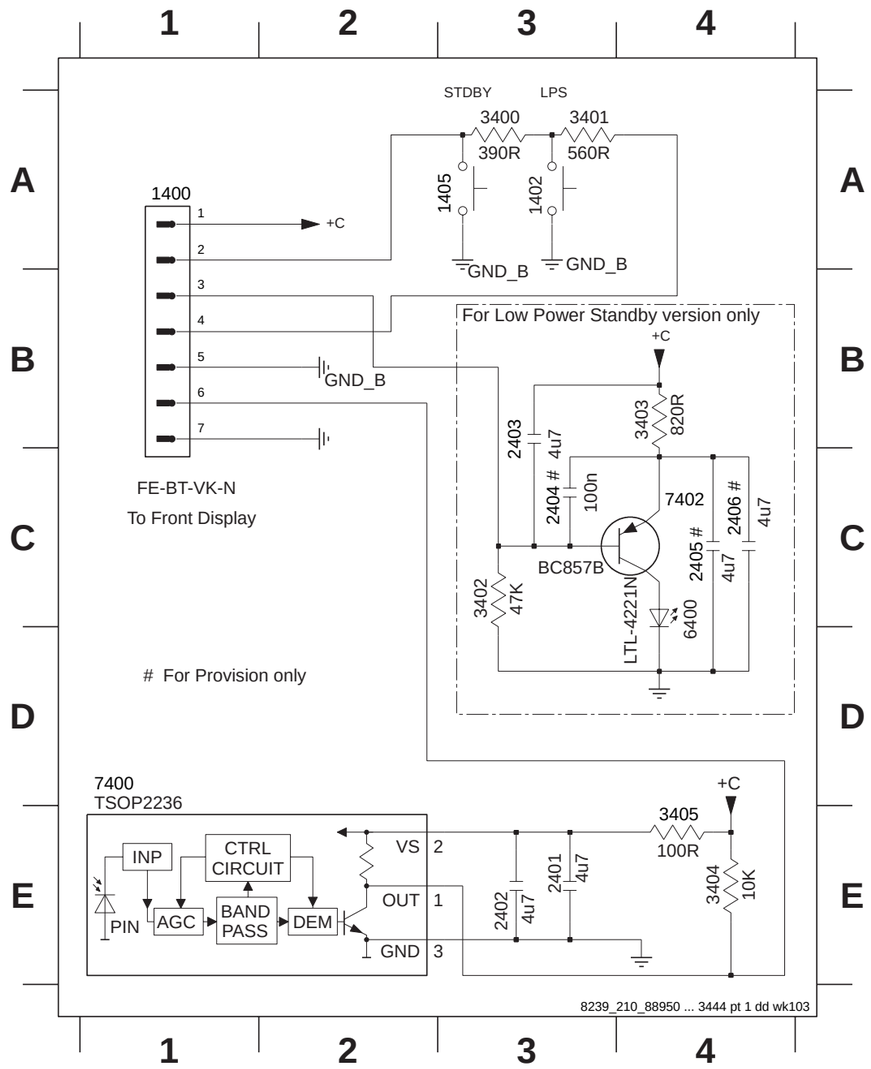

1400 A1 1402 A3 1405 A2 6400 A3 7400 A4

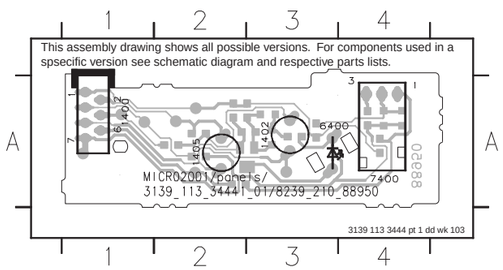

2401 A1 2402 A1 2403 A3 2404 A2 2405 A2 2406 A2 3400 A3 3401 A3 3402 A3 3403 A2 3404 A1 3405 A2 4401 A1 4402 A2 4403 A3 7402 A2

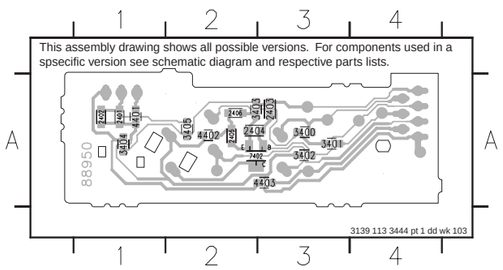

KEY CONTROL (KEYB. 1) PART - CIRCUIT & LAYOUT DIAGRAMS

1300 A1	1303 B6	1306 B8	1309 B9	1312 B11	1315 D6	3301 B5	3304 B7	3307 B8	3310 B10	3313 C5	3316 D3	3319 C3	6301 C4	6304 D4	
1301 B5	1304 B7	1307 B8	1310 B10	1313 C5	2300 B11	3302 B6	3305 B7	3308 B9	3311 B10	3314 C6	3317 C3	3320 D3	6302 C4		
1302 B6	1305 B7	1308 B9	1311 B10	1314 D6	3300 A5	3303 B6	3306 B8	3309 B9	3312 B5	3315 C6	3318 C3	6300 D4	6303 B4		

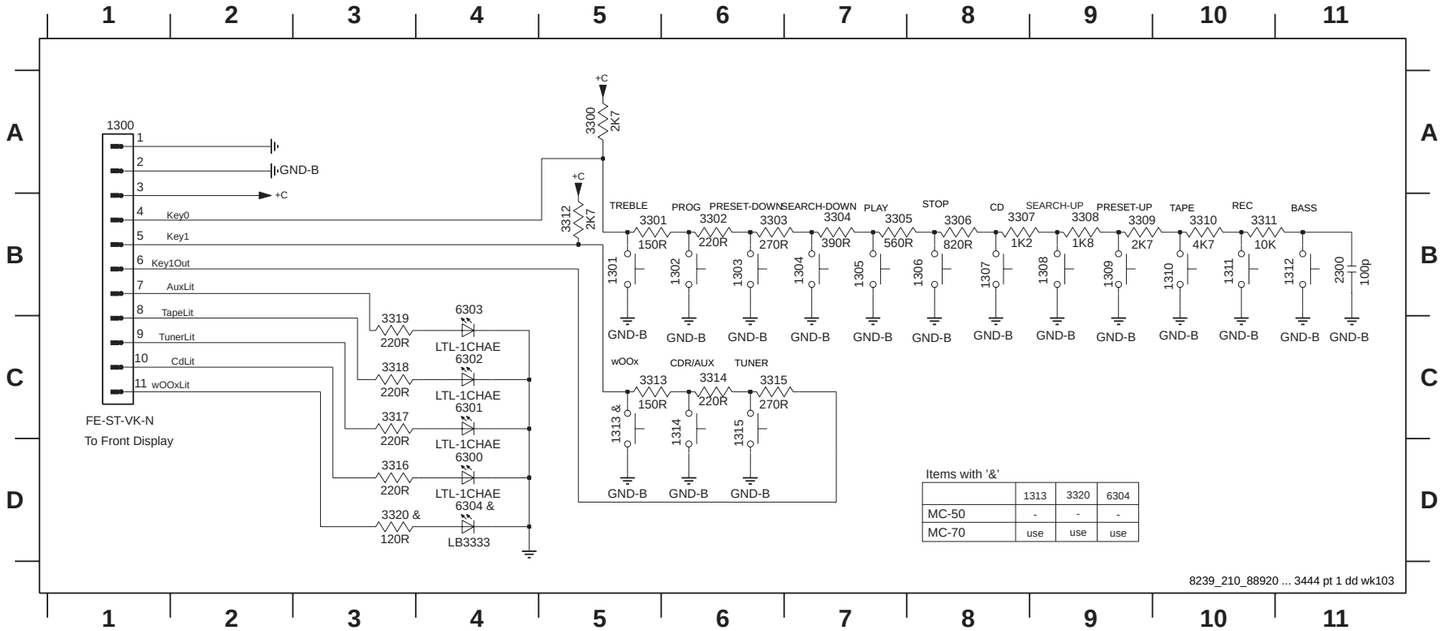

	1313	3320	6304
MC-50	-	-	-
MC-70	use	use	use

1300 A1 1302 A4 1304 A5 1306 A6 1308 A5 1310 A5 1312 A2 1314 A4 6300 A6 6302 A5 6304 A2 9301 A1 9304 A3 9306 A3 9308 A3
1301 A2 1303 A5 1305 A6 1307 A6 1309 A5 1311 A4 1313 A2 1315 A5 6301 A5 6303 A4 9300 A1 9302 A3 9305 A3 9307 A3

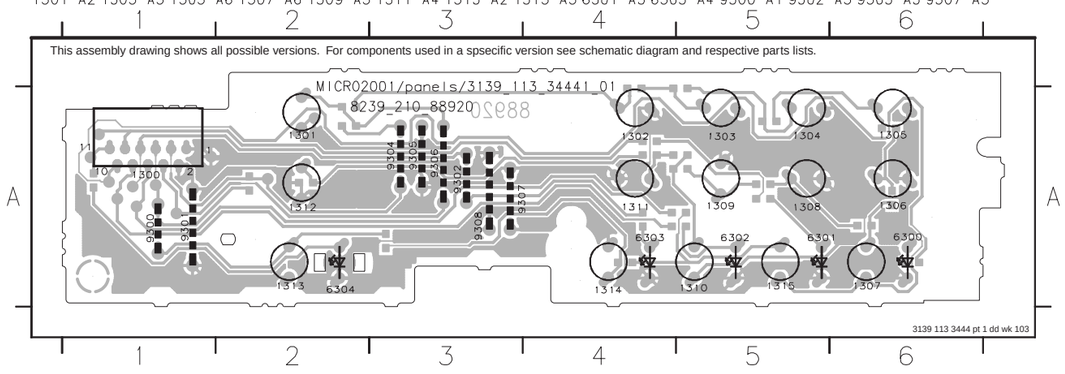

2300 A2 3301 A2 3303 A5 3305 A6 3307 A6 3309 A5 3311 A4 3313 A3 3315 A5 3317 A5 3319 A4 4302 A4
3300 A2 3302 A4 3304 A5 3306 A6 3308 A5 3310 A5 3312 A2 3314 A4 3316 A6 3318 A5 3320 A1

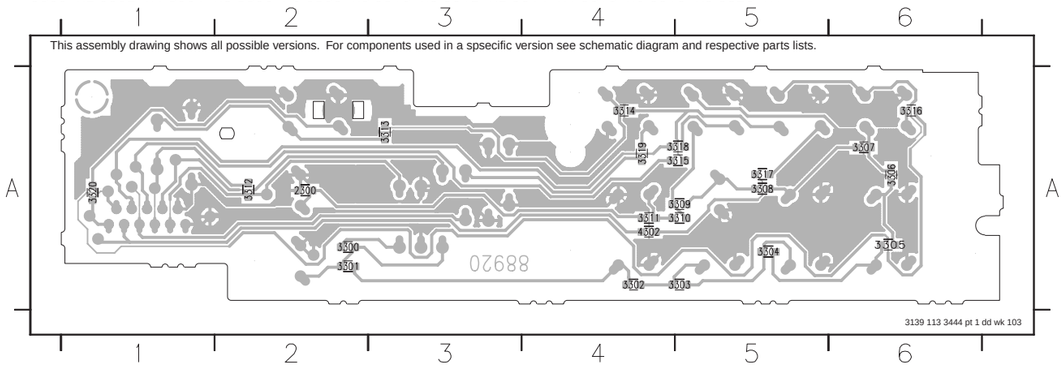

LIGHTWASH PART - CIRCUIT & LAYOUT DIAGRAMS

60 B1	3601 B3	6600 A4	6602 B4
3600 A3	3602 B3	6601 B4	

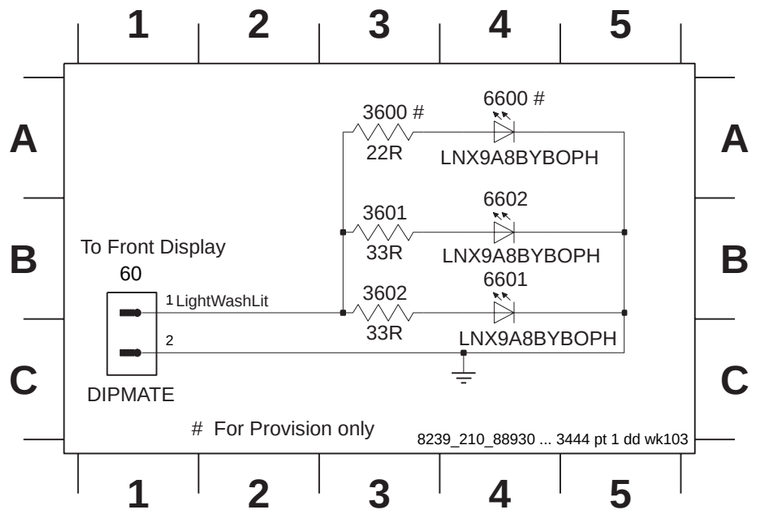

60 A1 6600 A4 6601 A1 6602 A4

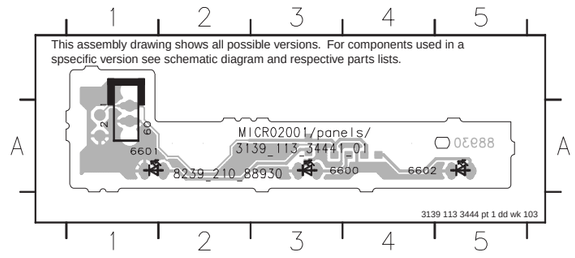

3600 A3 3601 A4 3602 A3

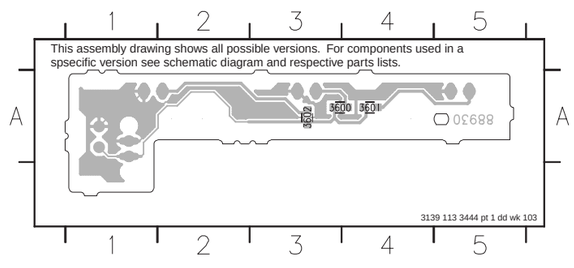

HEADPHONE PART - CIRCUIT & LAYOUT DIAGRAMS

1800 A1 1802 B3 2801 B3 4800 B2 5800 A2 5802 A2
1801 A4 2800 B2 2802 B3 4801 A2 5801 A2

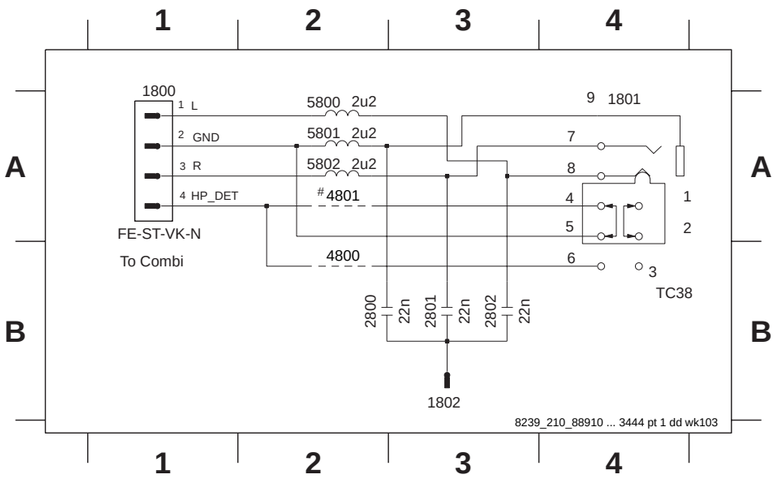

JOG (VOLUME) PART - CIRCUIT & LAYOUT DIAGRAMS

1700 B1 1701 A2 2700 B3 2701 B3 3700 A3 3701 A3

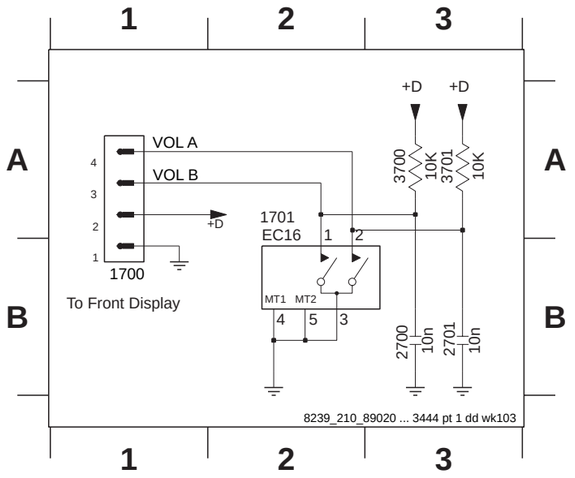

CDC KEY PART - CIRCUIT & LAYOUT DIAGRAMS

1500 A1 1502 B3 2500 A5 3501 A4
1501 B2 1503 B4 3500 A3

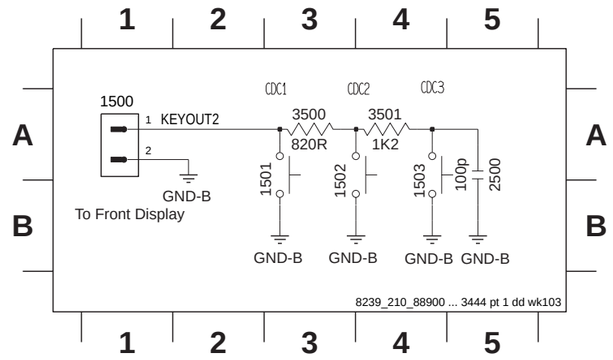

1800 B1 1801 A2 1802 B2

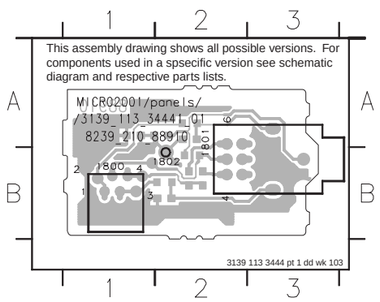

2800 A2 2802 A2 4801 B2 5800 A2 5802 B2
2801 B2 4800 B2 4802 A3 5801 B2

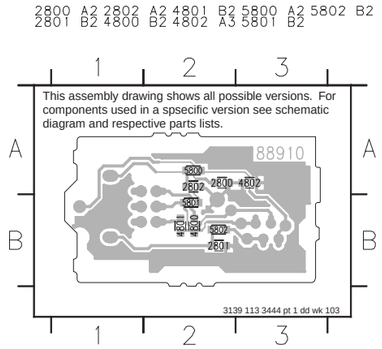

1700 B1 1701 B1

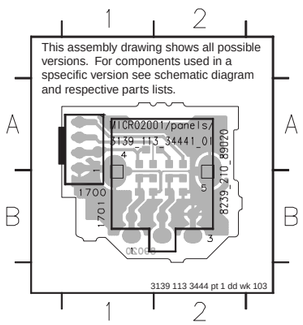

2700 B2 3700 B2 4700 B1 4704
2701 B1 3701 B1 4703 B1

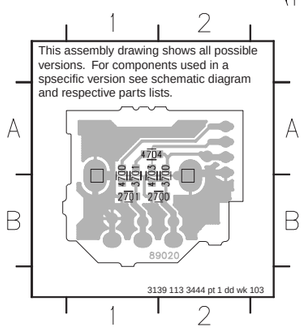

1500 A1 1501 A4 1502 A3 1503 A2

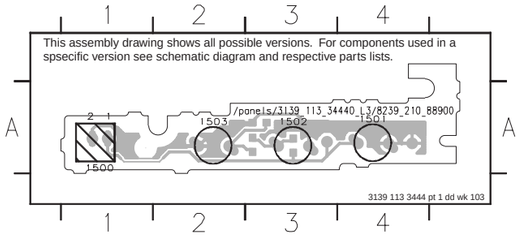

2500 A3 3500 A3 3501 A3

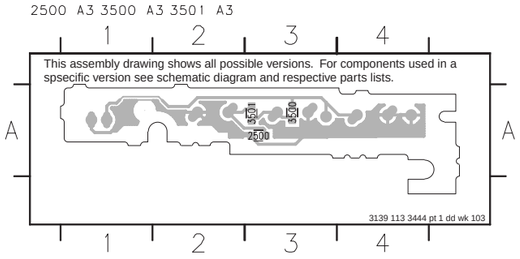

8-4

ELECTRICAL PARTS LIST - FRONT CONTROL BOARD

MISCELLANEOUS

1300	2422 025 14541	Flex Socket 11pin Hort.
1301	4822 276 13775	Tact Switch
1302	4822 276 13775	Tact Switch
1303	4822 276 13775	Tact Switch
1304	4822 276 13775	Tact Switch
1305	4822 276 13775	Tact Switch
1306	4822 276 13775	Tact Switch
1307	4822 276 13775	Tact Switch
1308	4822 276 13775	Tact Switch
1309	4822 276 13775	Tact Switch
1310	4822 276 13775	Tact Switch
1311	4822 276 13775	Tact Switch
1312	4822 276 13775	Tact Switch
1313	4822 276 13775	Tact Switch
1314	4822 276 13775	Tact Switch
1315	4822 276 13775	Tact Switch
1400	4822 267 10953	Flex Socket 7pin Vert.
1402	4822 276 13775	Tact Switch
1405	4822 276 13775	Tact Switch
1501	4822 276 13775	Tact Switch
1502	4822 276 13775	Tact Switch
1503	4822 276 13775	Tact Switch
1701	2422 129 16501	Rotary Encoder 12P
1800	4822 265 11183	Flex Socket 4pin Hort.
1801	4822 265 11529	Headphone Socket

CAPACITORS

2300	4822 122 31765	100pF 2% 63V
2401	2020 552 96305	4,7µF +80/-20% 10V
2402	2020 552 96305	4,7µF +80/-20% 10V
2403	2020 552 96305	4,7µF +80/-20% 10V
2500	4822 122 31765	100pF 2% 63V
2700	5322 126 11583	10nF 10% 50V
2701	5322 126 11583	10nF 10% 50V
2800	4822 126 14494	22nF 10% 25V
2801	4822 126 14494	22nF 10% 25V
2802	4822 126 14494	22nF 10% 25V

RESISTORS

3300	4822 051 30272	2k7 5% 0,062W
3301	4822 051 30151	150R 5% 0,062W
3302	4822 051 30221	220R 5% 0,062W
3303	4822 051 30271	270R 5% 0,062W
3304	4822 051 30391	390R 5% 0,062W
3305	4822 051 30561	560R 5% 0,062W
3306	4822 117 12968	820R 5% 0,62W
3307	4822 117 11817	1k2 1% 1/16W
3308	4822 117 12903	1k8 1% 0.063W
3309	4822 051 30272	2k7 5% 0,062W
3310	4822 051 30472	4k7 5% 0,062W
3311	4822 051 30103	10k 5% 0,062W
3312	4822 051 30272	2k7 5% 0,062W
3313	4822 051 30151	150R 5% 0,062W
3314	4822 051 30221	220R 5% 0,062W
3315	4822 051 30271	270R 5% 0,062W
3316	4822 051 30221	220R 5% 0,062W
3317	4822 051 30221	220R 5% 0,062W
3318	4822 051 30221	220R 5% 0,062W
3319	4822 051 30221	220R 5% 0,062W
3320	4822 051 30121	120R 5% 0,062W
3400	4822 051 30391	390R 5% 0,062W
3401	4822 051 30561	560R 5% 0,062W
3402	4822 117 12925	47k 1% 0.063W
3403	4822 117 12968	820R 5% 0,62W
3404	4822 051 30103	10k 5% 0,062W
3405	4822 051 30101	100R 5% 0,062W
3500	4822 117 12968	820R 5% 0,62W
3501	4822 117 11817	1k2 1% 1/16W
3601	4822 051 30339	33R 5% 0,062W
3602	4822 051 30339	33R 5% 0,062W
3700	4822 051 30103	10k 5% 0,062W
3701	4822 051 30103	10k 5% 0,062W
4302	4822 051 30008	0R Jumper 0603
4401	4822 051 30008	0R Jumper 0603
4402	4822 051 30008	0R Jumper 0603
4403	4822 051 30008	0R Jumper 0603
4700	4822 051 30008	0R Jumper 0603
4703	4822 051 30008	0R Jumper 0603
4704	4822 051 30008	0R Jumper 0603
4800	4822 051 30008	0R Jumper 0603
4802	4822 051 30008	0R Jumper 0603

COILS & FILTERS

5800	4822 157 10586	2,2µH 10% 0805
5801	4822 157 10586	2,2µH 10% 0805
5802	4822 157 10586	2,2µH 10% 0805

DIODES

6300	4822 130 11589	LTL-1CHAE
6301	4822 130 11589	LTL-1CHAE
6302	4822 130 11589	LTL-1CHAE
6303	4822 130 11589	LTL-1CHAE
6304	9322 153 37676	LB3333RT-E7898
6400	9322 160 65676	LTL-4221NLC-VA
6601	9322 147 33676	LNX9A8BYB0PH
6602	9322 147 33676	LNX9A8BYB0PH

TRANSISTORS & INTEGRATED CIRCUITS

7400	9322 164 67667	IR Receiver TSOP2236QJ1
7402	4822 130 60373	BC857B

Note: Only the parts mentioned in this list are normal service spare parts.

ETF-8 Module

(Electronic Tape Function) **stage .2**

TABLE OF CONTENTS

Connector assignment 9-1
Tape Module Wiring 9-2
Tape Mechanism electronics 9-2
Tape adjustment / Check Table 9-3
HEF4094BT Functional Block & Application Logic Table 9-3
ETF8 Board layouts - Components & Chips 9-4
ETF8 Circuit diagram 9-5
Exploded Views & mechanical parts list 9-6
Electrical parts list 9-8

9-1

CONNECTORS ASSIGNMENTS:

CONNECTOR 1701			INTERCONNECTION TO AF BOARD
○	1	REC-L	Record input left
○	2	REC-R	Record input right
○	3	GND A	AF Ground
○	4	TAPE-L	Playback output left
○	5	+12V	D.C. supply (+12V) for AF electronics
○	6	TAPE-R	Playback output right
○	7	-CMOS	Negative d.c. supply (-9V) for controlling JFET J111

CONNECTOR 1703			INTERCONNECTION TO AF BOARD
○	1	GND M	Motor Ground
○	2	+MOTOR	D.C. supply (+12V) for tape deck motor & solenoid

CONNECTOR 1706			INTERCONNECTION TO FRONT BOARD
○	1	CR_IN	Deck sensing Chrome Tape
○	2	AD1	Deck sensing switches output voltage / Deck EOT
○	3	+5V	DC supply (+5V) for deck status ADC network (ref to microprocessor's supply)
○	4	GND _P	Control & Oscillator Ground
○	5	CLK	HEF4094BT shift register Clock line
○	6	DATA	HEF4094BT shift register Data line
○	7	STROBE	HEF4094BT shift register Strobe line

CONNECTOR 1710			TAPE HEAD CONNECTIONS
○	1	GND A	Erase Head ground
○	2	ERASE HEAD	Erase Head
○	3	R/P HD Rch	R/P Head right channel positive
○	4	Common	Pb Head return ground shield
○	5	R/P HD Lch	R/P Head left channel positive

CONNECTOR 1760			DECK CONTROL INTERFACE
○	1	Vcc 12V	Deck / Motor supply
○	2	PHOTO	Photo sensor output (tape movement indication)
○	3	GND_M	Deck / Motor ground
○	4	MODE	Mode switch (head engagement)
○	5	Sol_supply	Solenoid supply
○	6	CR_IN	Chrome tape detection switch
○	7	REC FWD	Record tab protection status switch (forward)
○	8	REC REW	Record tab protection status switch (reverse)

TAPE DECK WIRING

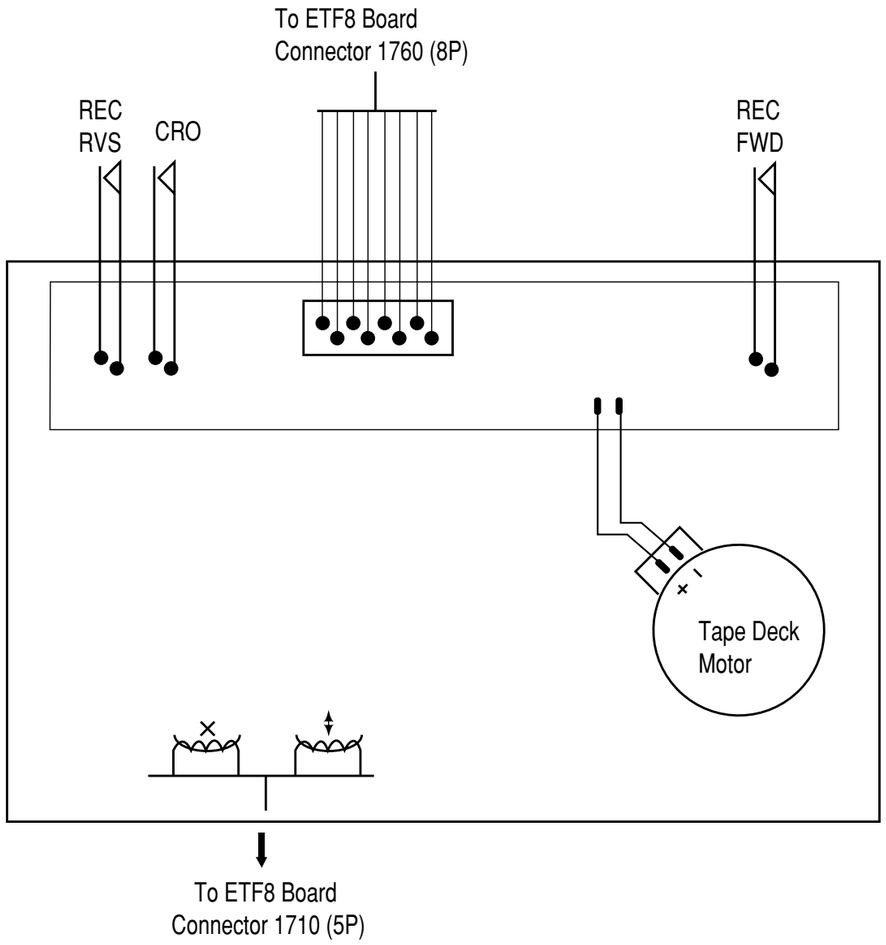

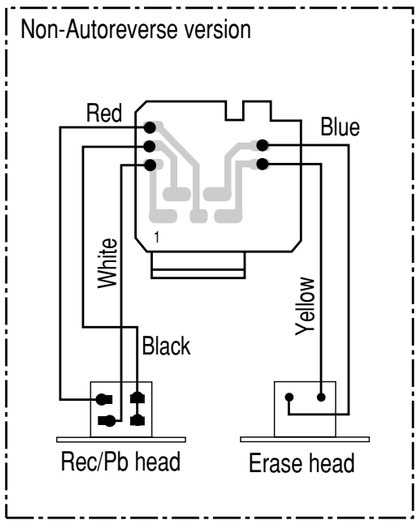

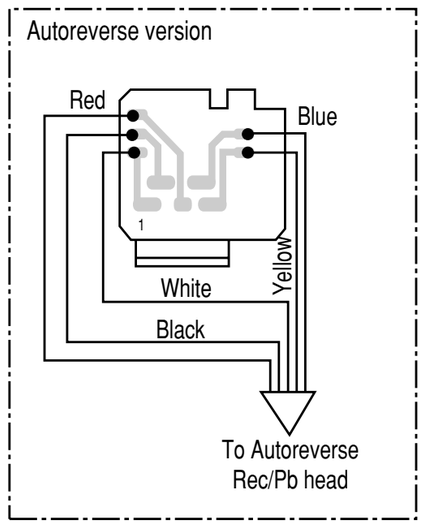

9-2

TAPE MECHANISM ELECTRONICS

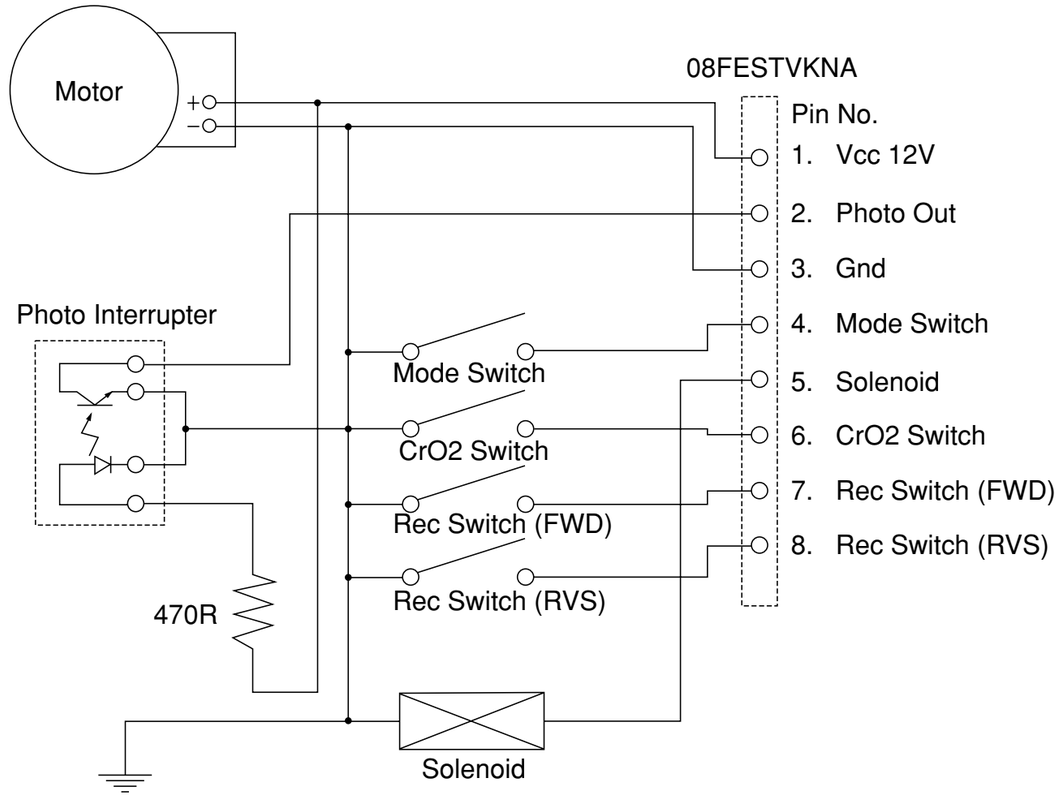

9-3

TAPE ADJUSTMENT & CHECK TABLE

	TEST CASSETTE	RECORDER MODE	MEASURE ON	READ ON	ADJUST with	ADJUST to
MOTOR SPEED	SBC420 3150Hz	PLAY	1 or 2 LEFT RIGHT	frequency counter	check	3150Hz +/- 2%
WOW & FLUTTER	SBC420 3150Hz	PLAY		W&F-meter	check	< 0.4 % DIN
ADJUST AZIMUTH	SBC420 10kHz	PLAY FWD		mV-meter	left hand screw	max. output level & left=right
		PLAY REV ^			right hand screw	
PLAYBACK FREQ. RESPONSE	SBC420	PLAY		mV-meter	check	limits see fig. 1 *
CHECK RECORD/PLAYBACK FREQUENCY AND DISTORTION						
Inject 8.85mV signals 100Hz, 250Hz, 1kHz, 10kHz, 12.5kHz via 3 or 4	SBC419A or SBC420	RECORD				
	RECORDED CASSETTE	PLAY	1 or 2 LEFT RIGHT	mV-meter	check	limits see fig. 2 *
Inject 1kHz 28mV via 3 or 4	SBC419A or SBC420	RECORD				
	RECORDED CASSETTE	PLAY	1 or 2 LEFT RIGHT	THD-meter	check	< 3% *

SBC419A : 4822 397 30069
SBC420 : 4822 397 30071

^ For Auto-reverse version only
* If high frequencies are not within limits, decrease bias and re-measure.
If distortion is too high, increase bias and re-meaure

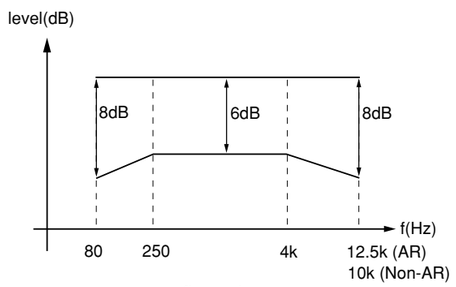

figure. 1

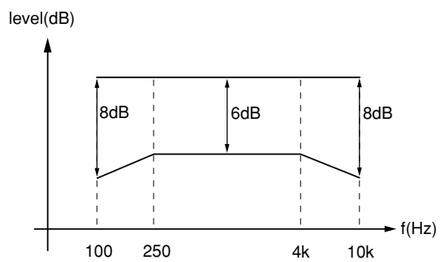

figure. 2

HEF4094BT FUNCTIONAL BLOCK DIAGRAM

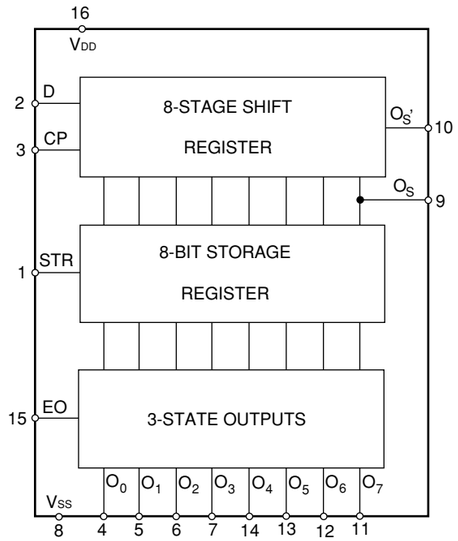

AF Control Logic State Table

State of Module	Control lines from HEF4094BT							
	O_0	O_1	O_2	O_3	O_4	O_5	O_6	O_7
	CR_SEL	REC	BIAS_OFF	CR_BIAS		SOL	MUTE_OFF	MOT
Stop	0	0	1	X	Not in used	Deck Mechanism Timing	0	0
Playback (Ferro)	0	0	1	0			1	1
Playback (Chrome)	1	0	1	1			1	1
Record (Ferro)	0	1	0	0			0	1
Record (Chrome)	1	1	0	1			0	1
FWD	0	0	1	X			0	1
REW	0	0	1	X			0	1

Note: 0 = Logic Low
1 = Logic High
X = Not applicable

COMPONENT LAYOUT

1701 A3	2715 A5	2795 B3	6612 A2	6777 D2	9704 C4
1703 A1	2716 B5	2796 C3	6770 D3	6778 D2	9705 B5
1706 C2	2761 A3	2797 B4	6771 D3	7782 D4	9706 C4
1710 A5	2768 A2	2798 A3	6772 C4	7786 B5	
1760 A1	2780 C1	3778 C3	6773 C4	9701 C3	
2713 A4	2784 C5	5701 A5	6774 D4	9702 C2	
2714 C3	2785 C3	5703 D5	6776 D2	9703 A5	

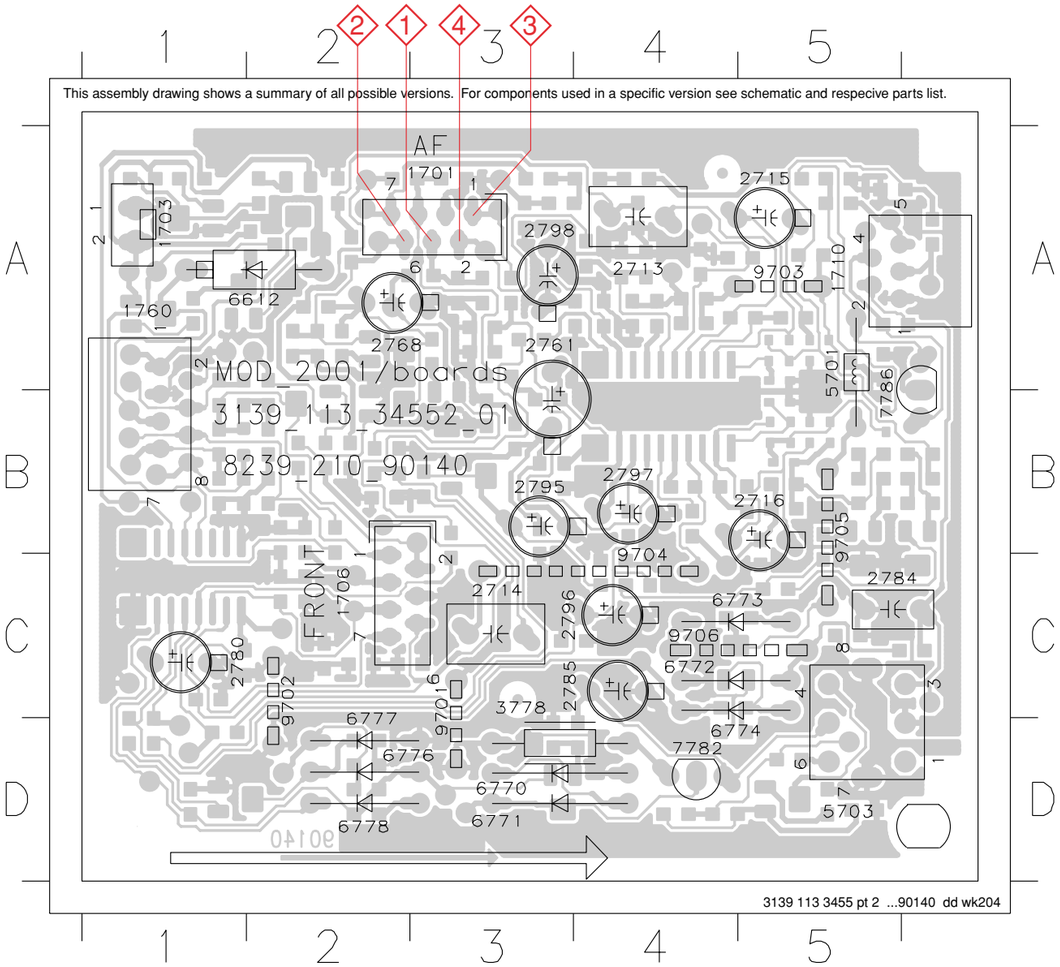

9-4

CHIP LAYOUT

2621 C5	2732 A1	3630 A4	3745 B4	3796 A2	4735 A2
2622 C5	2743 C1	3678 A5	3746 A4	3797 B4	4736 B1
2623 C4	2747 A3	3680 A4	3749 A1	3800 D5	4737 A2
2625 B4	2769 A3	3686 B4	3750 A1	4701 A4	4738 B1
2701 A1	2770 A4	3709 A1	3762 D4	4702 B4	4739 A1
2702 A1	2781 D1	3710 B1	3764 B3	4705 A3	4741 A3
2703 A3	2782 D2	3711 A1	3768 A3	4707 C3	4746 A1
2704 A2	2786 C1	3712 B1	3769 D4	4708 A3	4747 A1
2709 A1	2787 D2	3717 A2	3770 D2	4709 B4	7610 C5
2710 B1	2788 A3	3718 B1	3771 D3	4710 C4	7612 A4
2711 A2	2789 A2	3719 B1	3772 D5	4711 B4	7614 A5
2712 B4	2790 B2	3720 B1	3774 D4	4712 B4	7618 A5
2717 A2	2791 A1	3721 B1	3775 D1	4718 C2	7620 A5
2718 B1	2793 A1	3722 B1	3776 D2	4719 B3	7624 B4
2719 B1	2794 B1	3723 A1	3777 D1	4720 C2	7720 B2
2720 B1	2799 B3	3724 B1	3779 C2	4721 C2	7780 D5
2721 A2	3607 B5	3733 A3	3780 C1	4723 B4	7781 D1
2722 B2	3608 B5	3734 A2	3781 A2	4725 B3	7783 D3
2723 A2	3609 B5	3735 A3	3786 D5	4726 B3	7784 C1
2724 B1	3610 B5	3736 A2	3789 D4	4727 C4	7788 B4
2725 A4	3611 B5	3737 A3	3790 A3	4729 B2	7789 B3
2727 A1	3612 B5	3738 A4	3791 C2	4730 B2	7790 A4
2728 B1	3614 B4	3739 A4	3792 D5	4731 C4	7792 B3
2729 A1	3624 A4	3740 B4	3793 B3	4732 A2	7793 B1
2730 B1	3626 A5	3743 A3	3794 B1	4733 B3	7794 B1
2731 A1	3628 A5	3744 A4	3795 C1	4734 B3	

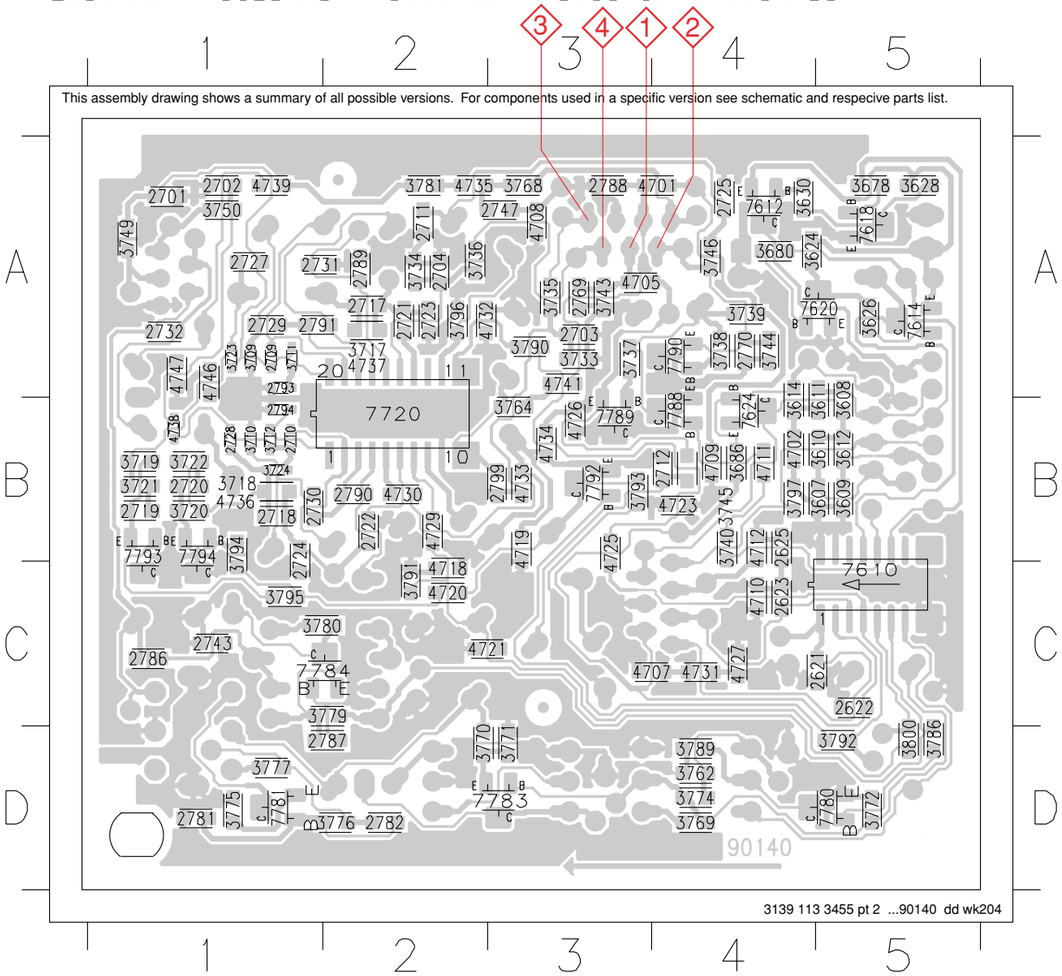

9-5

CIRCUIT DIAGRAM

1701 D14 2621 A3 2702 E3 2711 D9 2716 H8 2721 D7 2727 D3 2732 G2 2769 E12 2784 I1 2789 E8 2795 G5 3607 A11 3612 B11 3630 A9 3710 I8 3719 E4 3724 E3 3737 G13 3744 F11 3762 H2 3771 I3 3777 I2 3786 I5 3793 F5 3800 G11 6612 A10 6774 G3 7612 A9 7720 F8 7784 G3 7792 F6
1703 A1 2622 A3 2703 E13 2712 I8 2717 D5 2722 H7 2728 E3 2743 I1 2770 F11 2785 I2 2790 G8 2796 G9 3608 B10 3614 C11 3678 B8 3711 E7 3720 E4 3733 E13 3738 G12 3745 D12 3764 F9 3772 I3 3778 H1 3789 I4 3794 F5 4736 D5 6770 H2 6776 I4 7614 A10 7780 I4 7786 G2 7793 F4
1706 A1 2623 A2 2704 F12 2713 D9 2718 E5 2723 D7 2729 E8 2747 D13 2780 I3 2786 G1 2791 E8 2797 G9 3609 A11 3624 A9 3680 B9 3712 G7 3721 E4 3734 F13 3739 G13 3746 D11 3768 D13 3774 H3 3779 G3 3790 D9 3795 F5 4737 D5 6771 H2 6777 H3 7618 B9 7781 I3 7788 G13 7794 F4
1710 F1 2625 C5 2709 E7 2714 H8 2719 F4 2724 H7 2730 H8 2761 F10 2781 I3 2787 G3 2793 F7 2798 E9 3610 B11 3625 A10 3640 C11 3717 D5 3722 E4 3735 E13 3740 G14 3749 D2 3769 H5 3775 I3 3780 G2 3791 G9 3796 E10 5701 G2 6772 G1 6778 H5 7620 B9 7782 H2 7789 G12
1760 A14 2701 D2 2710 G7 2715 D8 2720 F4 2725 D10 2731 E9 2768 G13 2782 I2 2788 D13 2794 G8 2799 F10 3611 A10 3628 A9 3709 D8 3718 E5 3723 D3 3736 E13 3743 E12 3750 E2 3770 I2 3776 I2 3781 G2 3792 F6 3797 C11 5703 I1 6773 G2 7610 B5 7624 C11 7783 H2 7790 G12

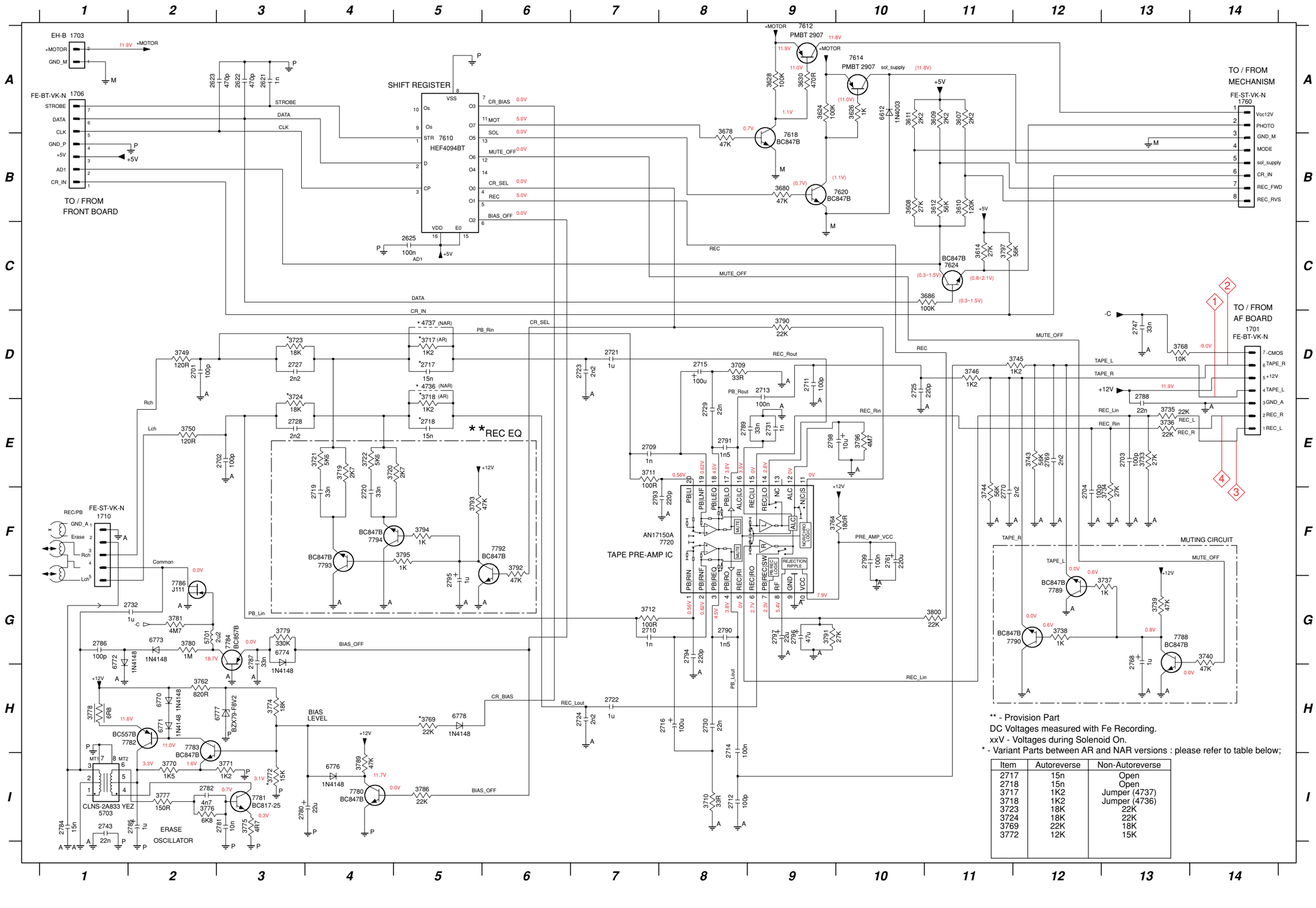

Item	Autoreverse	Non-Autoreverse
2717	15n	Open
2718	15n	Open
3717	1K2	Jumper (4737)
3718	1K2	Jumper (4736)
3723	18K	22K
3724	18K	22K
3769	22K	18K
3772	12K	15K

AUTOREVERSE (AR) TAPE MECHANISM

MECHANICAL PARTS LIST - AUTOREVERSE TAPE MECHANISM

1	9965 000 10041	Rec/Pb Head assembly
7	9965 000 10042	Cap Pinch R
8	9965 000 10043	Cap Pinch L
9	9965 000 10044	Roller Pinch
32	9965 000 10045	Solenoid assembly
34	9965 000 10046	Motor Assembly
36	9965 000 07441	Belt-SR
37	9965 000 07442	Belt-FR
39	9965 000 10047	Flex Socket 5pin Hort.
40-2	9965 000 10048	Flex Socket 8pin Hort.
40-3	9965 000 10049	Mode Switch
40-4	4822 116 83883	470R 5% 0,5W
40-5	9965 000 10050	Spacer
40-6	9965 000 10051	Photo Interrupter
40-7	9965 000 07443	Box Switch
40-8	9965 000 10052	Spring Sw
61	9965 000 10053	Spring
62	9965 000 10054	Spring

Note: Only the parts mentioned in this list are normal service spare parts.

9-6

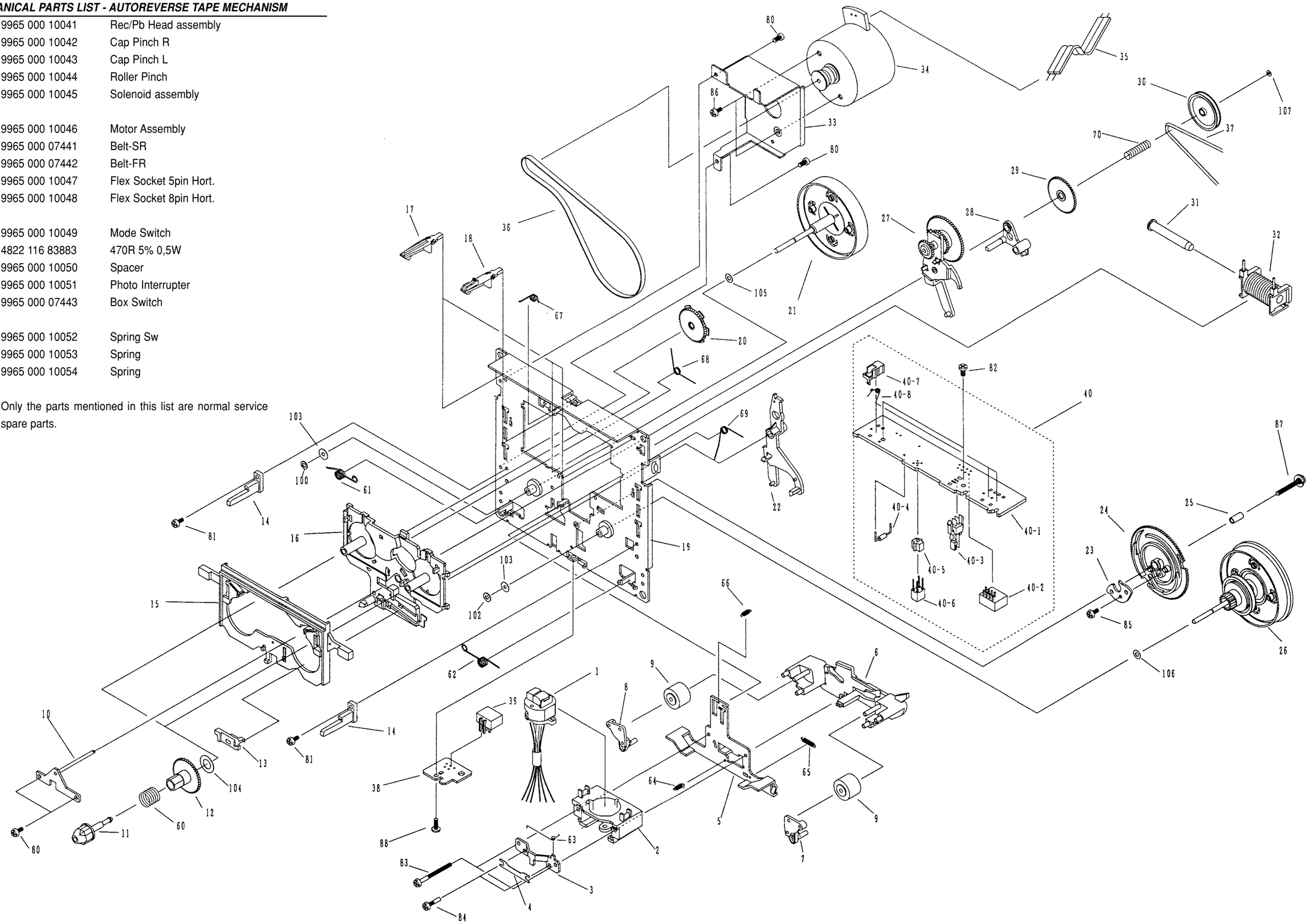

NON-AUTOREVERSE (NAR) TAPE MECHANISM

MECHANICAL PARTS LIST - NON-AUTOREVERSE TAPE MECHANISM

1	9965 000 12110	Play Head
2	9965 000 02600	Erase Head
7	9965 000 10042	Cap Pinch Roller
9	9965 000 10044	Roller Pinch
32	9965 000 07439	Solenoid Assy
34	9965 000 10046	Assembly Motor
36	9965 000 12114	Belt SF
37	9965 000 07442	Belt FR
39	9965 000 12115	Flex Socket 5pin Hort.
40-2	4822 265 11535	Flex Socket 8pin Hort.
40-3	9965 000 10049	Mode Switch
40-4	4822 116 83883	470R 5% 0,5W
40-5	9965 000 12116	Spacer
40-6	9965 000 10051	Photo Interrupter
40-7	9965 000 07443	Box Switch
40-8	9965 000 10052	Spring Sw
61	9965 000 10053	Spring
62	9965 000 10054	Spring

Note: Only the parts mentioned in this list are normal service spare parts.

9-7

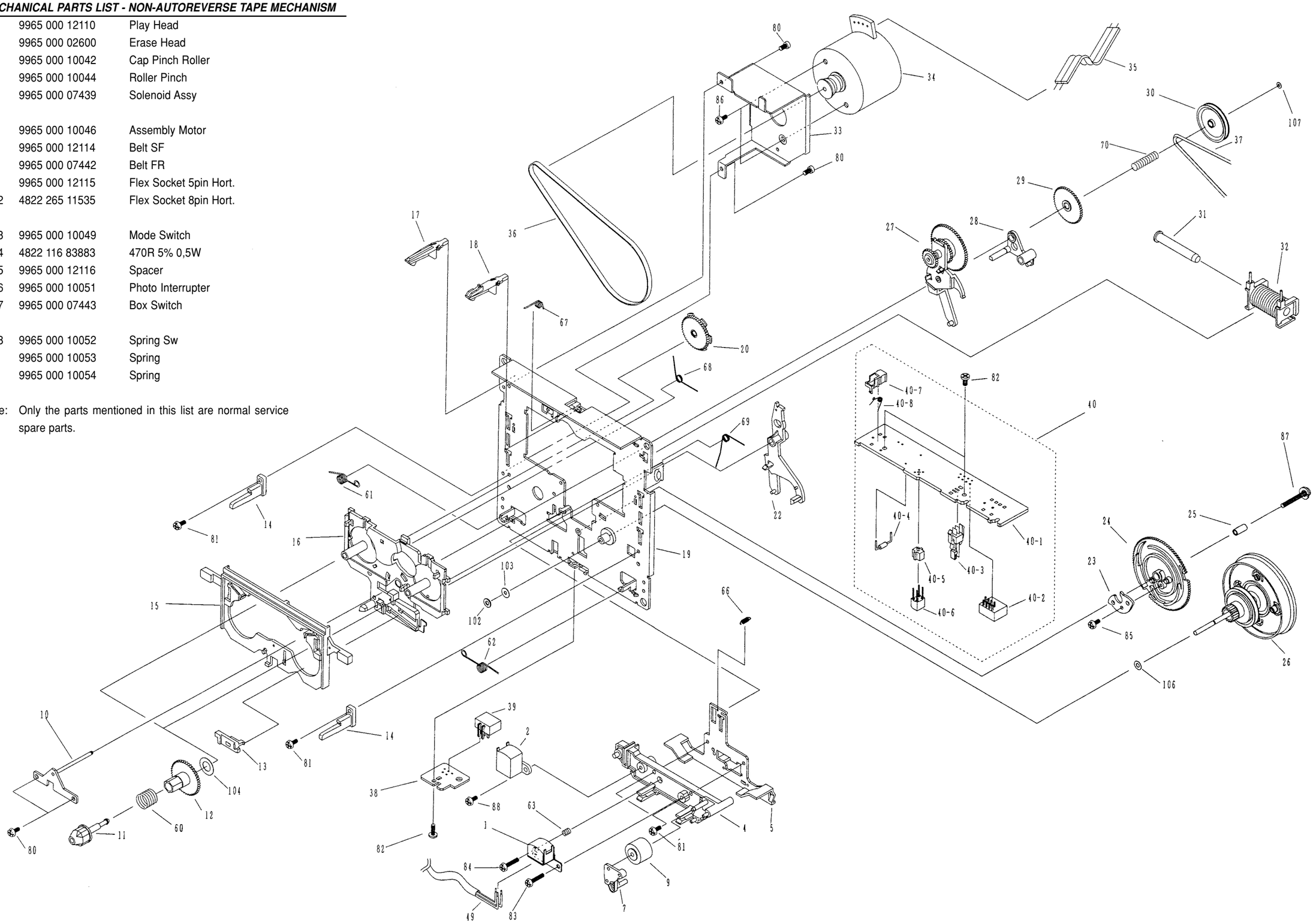

TAPE MODULE EXPLODED VIEW

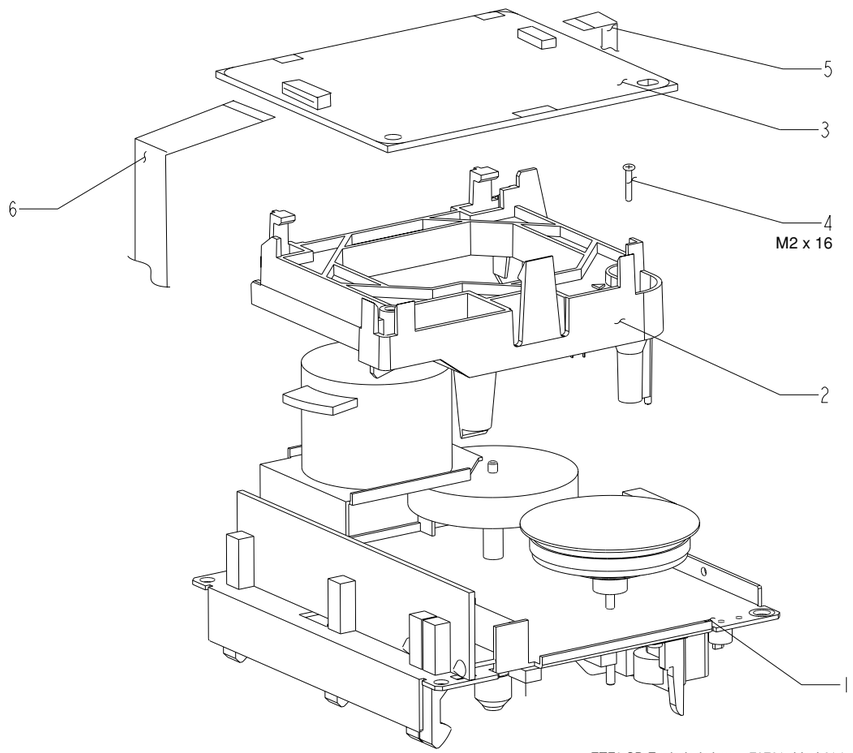

ETF8 SD Exploded view ....78730 dd wk204

MECHANICAL PARTS LIST - TAPE MODULE

1	3139 118 78740	AR Tape Mech. CRL4438
1	3139 118 79220	Non-AR Tape Mech. CFL4217
5	3139 110 35580	Flex Cable 5pin 40mm AD
6	3139 110 35590	Flex Cable 8pin 48mm AD

Note: Only the parts mentioned in this list are normal service spare parts.

9-8

ELECTRICAL PARTS LIST - ETF8 BOARD

MISCELLANEOUS

1701	4822 267 10953	Flex Socket 7pin Vert.	
1706	4822 267 10953	Flex Socket 7pin Vert.	
1710	4822 267 10958	Flex Socket 5pin Hort.	
1760	4822 265 11535	Flex Socket 8pin Hort.	

CAPACITORS

2621	5322 126 11578	1nF 10% 50V	
2622	4822 126 13881	470pF 5% 50V	
2623	4822 126 13881	470pF 5% 50V	
2625	4822 126 14305	100nF 10% 16V	
2701	4822 122 31765	100pF 2% 63V	
2702	4822 122 31765	100pF 2% 63V	
2703	4822 122 31765	100pF 2% 63V	
2704	4822 122 31765	100pF 2% 63V	
2709	5322 126 11578	1nF 10% 50V	
2710	5322 126 11578	1nF 10% 50V	
2711	4822 122 31765	100pF 2% 63V	
2712	4822 122 31765	100pF 2% 63V	
2713	5322 121 42386	100nF 5% 63V	
2714	5322 121 42386	100nF 5% 63V	
2715	4822 124 41584	100uF 20% 10V	
2716	4822 124 41584	100uF 20% 10V	
2717	3198 017 31530	15nF 50V	AR
2718	3198 017 31530	15nF 50V	AR
2721	3198 017 41050	1uF 10V	
2722	3198 017 41050	1uF 10V	
2723	4822 126 14238	2,2nF 50V	
2724	4822 126 14238	2,2nF 50V	
2725	4822 126 13883	220pF 5% 50V	
2727	4822 126 14238	2,2nF 50V	
2728	4822 126 14238	2,2nF 50V	
2729	4822 126 14494	22nF 10% 25V	
2730	4822 126 14494	22nF 10% 25V	
2731	5322 126 11578	1nF 10% 50V	
2732	3198 017 41050	1uF 10V	
2743	4822 126 14494	22nF 10% 25V	
2747	4822 126 14549	33nF 16V	
2761	4822 124 40196	220uF 20% 16V	
2768	4822 124 40756	1uF 20% 100V	
2769	4822 126 14238	2,2nF 50V	
2770	4822 126 14238	2,2nF 50V	
2780	4822 124 81151	22uF 50V	
2781	5322 126 11583	10nF 10% 50V	
2782	4822 126 13193	4,7nF 10% 63V	
2784	4822 121 51305	15nF 10% 50V	
2785	4822 124 21913	1uF 20% 63V	
2786	4822 122 31765	100pF 2% 63V	
2787	4822 126 14549	33nF 16V	
2788	4822 126 14494	22nF 10% 25V	
2789	4822 126 14549	33nF 16V	
2790	4822 126 14247	1,5nF 50V	
2791	4822 126 14247	1,5nF 50V	
2793	4822 126 13883	220pF 5% 50V	
2794	4822 126 13883	220pF 5% 50V	
2796	4822 124 40433	47uF 20% 25V	
2797	4822 124 81151	22uF 50V	
2798	4822 124 21732	10uF 20% 25V	
2799	4822 126 14305	100nF 10% 16V	

RESISTORS

3607	4822 051 30222	2k2 5% 0,062W	
3608	4822 051 30273	27k 5% 0,062W	
3609	4822 051 30222	2k2 5% 0,062W	
3610	4822 051 20124	120k 5% 0,1W	
3611	4822 051 30222	2k2 5% 0,062W	
3612	4822 051 30563	56k 5% 0,062W	
3614	4822 051 30273	27k 5% 0,062W	
3624	4822 117 13632	100k 1% 0,062W	
3626	4822 051 30102	1k 5% 0,062W	
3628	4822 117 13632	100k 1% 0,062W	
3630	4822 051 30471	470R 5% 0,062W	
3678	4822 117 12925	47k 1% 0,063W	
3680	4822 117 12925	47k 1% 0,063W	
3686	4822 117 13632	100k 1% 0,062W	
3709	4822 051 30339	33R 5% 0,062W	
3710	4822 051 30339	33R 5% 0,062W	
3711	4822 051 30101	100R 5% 0,062W	
3712	4822 051 30101	100R 5% 0,062W	
3717	4822 117 11817	1k2 1% 1/16W	AR
3718	4822 117 11817	1k2 1% 1/16W	AR
3723	4822 051 30183	18k 5% 0,062W	AR
3723	4822 051 30223	22k 5% 0,062W	Non-AR
3724	4822 051 30183	18k 5% 0,062W	AR
3724	4822 051 30223	22k 5% 0,062W	Non-AR
3733	4822 051 30273	27k 5% 0,062W	
3734	4822 051 30273	27k 5% 0,062W	
3735	4822 051 30223	22k 5% 0,062W	
3736	4822 051 30223	22k 5% 0,062W	
3737	4822 051 30102	1k 5% 0,062W	
3738	4822 051 30102	1k 5% 0,062W	
3739	4822 117 12925	47k 1% 0,063W	
3740	4822 117 12925	47k 1% 0,063W	
3743	4822 051 30563	56k 5% 0,062W	
3744	4822 051 30563	56k 5% 0,062W	
3745	4822 117 11817	1k2 1% 1/16W	
3746	4822 117 11817	1k2 1% 1/16W	
3749	4822 051 30121	120R 5% 0,062W	
3750	4822 051 30121	120R 5% 0,062W	
3762	4822 117 12968	820R 5% 0,62W	
3764	4822 051 30181	180R 5% 0,062W	
3768	4822 051 30103	10k 5% 0,062W	
3769	4822 051 30223	22k 5% 0,062W	AR
3769	4822 051 30183	18k 5% 0,062W	Non-AR
3770	4822 051 30152	1k5 5% 0,062W	

ELECTRICAL PARTS LIST - ETF8 BOARD

RESISTORS

3771	4822 117 11817	1k2 1% 1/16W	
3772	4822 051 30153	15k 5% 0,062W	AR
3772	4822 051 30123	12k 5% 0,062W	Non-AR
3774	4822 051 30183	18k 5% 0,062W	
3775	4822 117 13608	4,7R 5% 0,063W	
3776	4822 051 30682	6k8 5% 0,062W	
3777	4822 051 30151	150R 5% 0,062W	
3778	4822 052 10688	6R8 5% 0,33W	
3779	4822 051 30334	330k 5% 0,062W	
3780	4822 051 30105	1M 5% 0,062W	
3781	4822 051 30475	4M7 5% 0,062W	
3786	4822 051 30223	22k 5% 0,062W	
3789	4822 117 12925	47k 1% 0,063W	
3790	4822 051 30223	22k 5% 0,062W	
3791	4822 051 30273	27k 5% 0,062W	
3796	4822 051 30475	4M7 5% 0,062W	
3797	4822 051 30563	56k 5% 0,062W	
3800	4822 051 30223	22k 5% 0,062W	
4701	4822 051 30008	0R Jumper 0603	
4702	4822 051 30008	0R Jumper 0603	
4705	4822 051 30008	0R Jumper 0603	
4707	4822 051 30008	0R Jumper 0603	
4708	4822 051 30008	0R Jumper 0603	
4709	4822 051 30008	0R Jumper 0603	
4710	4822 051 30008	0R Jumper 0603	
4711	4822 051 30008	0R Jumper 0603	
4712	4822 051 30008	0R Jumper 0603	
4718	4822 051 30008	0R Jumper 0603	
4719	4822 051 30008	0R Jumper 0603	
4720	4822 051 30008	0R Jumper 0603	
4721	4822 051 30008	0R Jumper 0603	
4723	4822 051 30008	0R Jumper 0603	
4725	4822 051 30008	0R Jumper 0603	
4726	4822 051 30008	0R Jumper 0603	
4727	4822 051 30008	0R Jumper 0603	
4729	4822 051 30008	0R Jumper 0603	
4730	4822 051 30008	0R Jumper 0603	
4731	4822 051 30008	0R Jumper 0603	
4732	4822 051 30008	0R Jumper 0603	
4733	4822 051 30008	0R Jumper 0603	
4734	4822 051 30008	0R Jumper 0603	
4735	4822 051 30008	0R Jumper 0603	
4736	4822 051 30008	0R Jumper 0603	Non-AR
4737	4822 051 30008	0R Jumper 0603	Non-AR
4738	4822 051 30008	0R Jumper 0603	
4739	4822 051 30008	0R Jumper 0603	
4741	4822 051 30008	0R Jumper 0603	
4746	4822 051 30008	0R Jumper 0603	
4747	4822 051 30008	0R Jumper 0603	

COILS & FILTERS

5701	4822 157 62552	Coil 2,2uH 5%
5703	4822 156 20946	Osc Coil 100kHz

DIODES

6612	4822 130 31878	1N4003G
6770	4822 130 30621	1N4148
6771	4822 130 30621	1N4148
6772	4822 130 30621	1N4148
6773	4822 130 30621	1N4148
6774	4822 130 30621	1N4148
6776	4822 130 30621	1N4148
6777	3198 010 58280	BZX79-B8V2
6778	4822 130 30621	1N4148

TRANSISTORS & INTEGRATED CIRCUIT

7610	5322 209 11306	HEF4094BT
7612	4822 130 11201	PMBT2907
7614	4822 130 11201	PMBT2907
7618	4822 130 60511	BC847B
7620	4822 130 60511	BC847B
7624	4822 130 60511	BC847B
7720	9322 167 09668	AN17150ATA
7780	4822 130 60511	BC847B
7781	4822 130 42804	BC817-25
7782	4822 130 44568	BC557B
7783	4822 130 60511	BC847B
7784	4822 130 60373	BC857B
7786	4822 130 63494	J111
7788	4822 130 60511	BC847B
7789	4822 130 60511	BC847B
7790	4822 130 60511	BC847B

Note: Only the parts mentioned in this list are normal service spare parts.

Technical Remarks

3DTC Module

(Basic version)

Layout stage .5

TABLE OF CONTENTS

Service hints 10-2
Wiring.....10-3
Location of switches.....10-4
Blockdiagram 10-5
Component Layout Main Board 10-6
Circuit Diagram part1 10-7
Component Layout Main Board 10-8
Circuit Diagram part2 10-9
Circuit Diagram part3 10-10
Exploded View 10-11
Mechanical Partslist 10-11
Electrical Partslist.....10-12

See also separate Training Manual 3DTC **3103 785 25140**

WARNING

CHARGED CAPACITORS ON THE SERVO BOARD MAY DAMAGE THE CD DRIVE ELECTRONICS WHEN CONNECTING A NEW CDM MECHANISM. THAT´S WHY, BESIDES THE SAFETY MEASURES LIKE
• SWITCH OFF POWER SUPPLY
• ESD PROTECTION
ADDITIONAL ACTIONS MUST BE TAKEN BY THE REPAIR TECHNICIAN.

The following steps have to be done when replacing the CD mechanism:

1. Disconnect flexfoil from old CD drive
2. Put a paperclip over contacts of flexfoil to short-circuit the contacts (fig.1)
3. Remove old CD drive
4. Remove paperclip from flexfoil
5. Connect flexfoil to new CD drive
6. Remove ESD-protection (solder joint) from laserunit (see below)
7. Position new CD drive in its studs

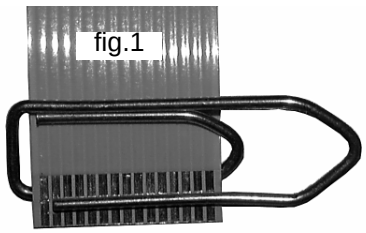
fig.1

Attention: The laser diode of this CD drive is protected against ESD by a solder joint which shortcircuits the laserdiode to ground.
For proper functionality of the CD drive this solder joint must be removed **after** connection the drive to the set.

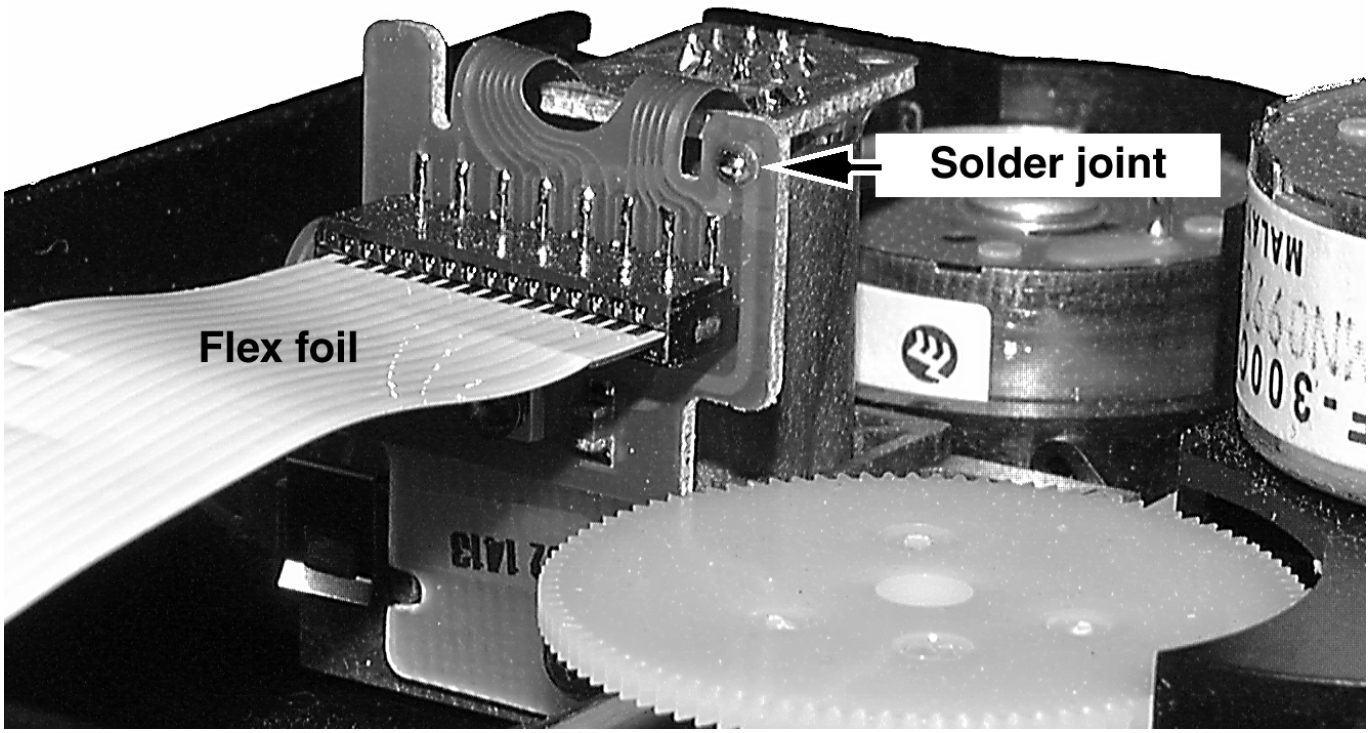

WIRING

Module

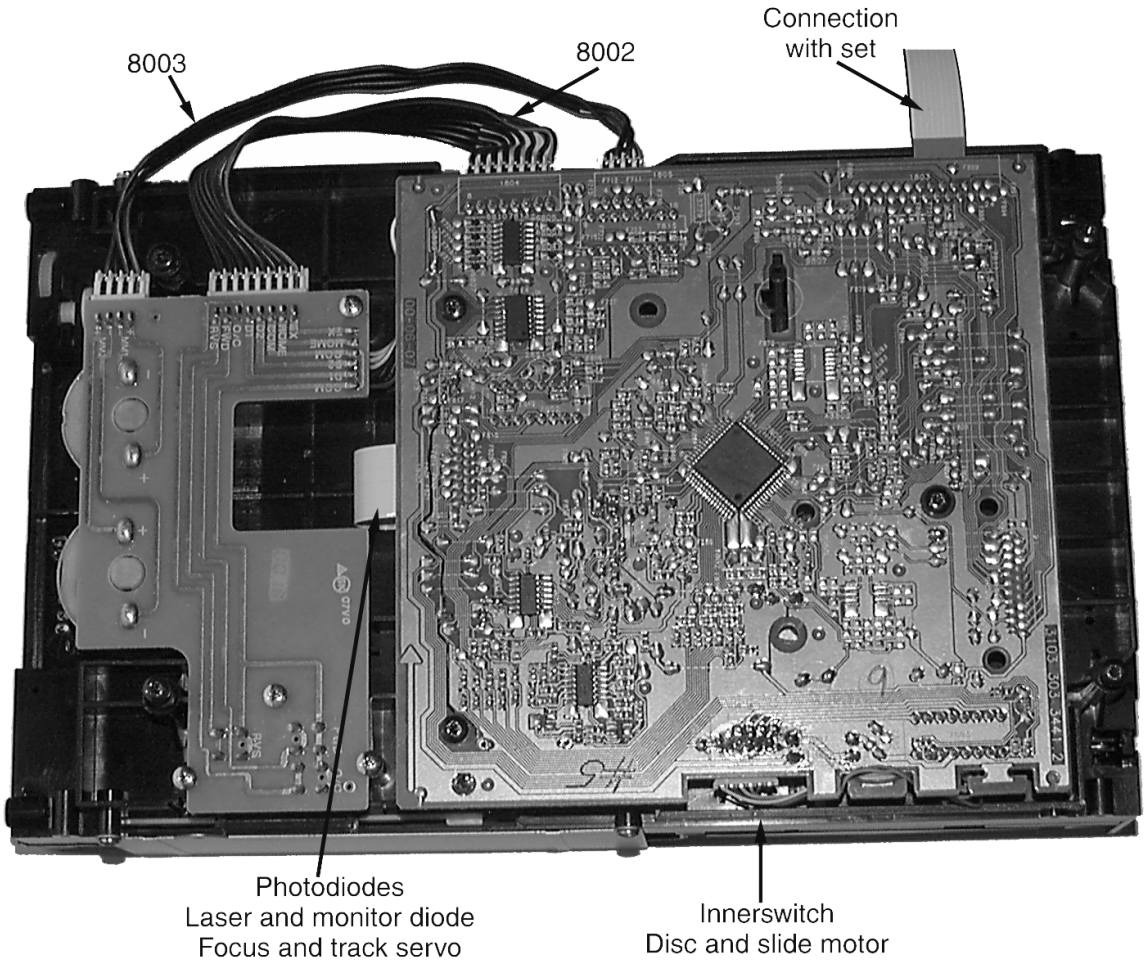

WIRING

CD Drive

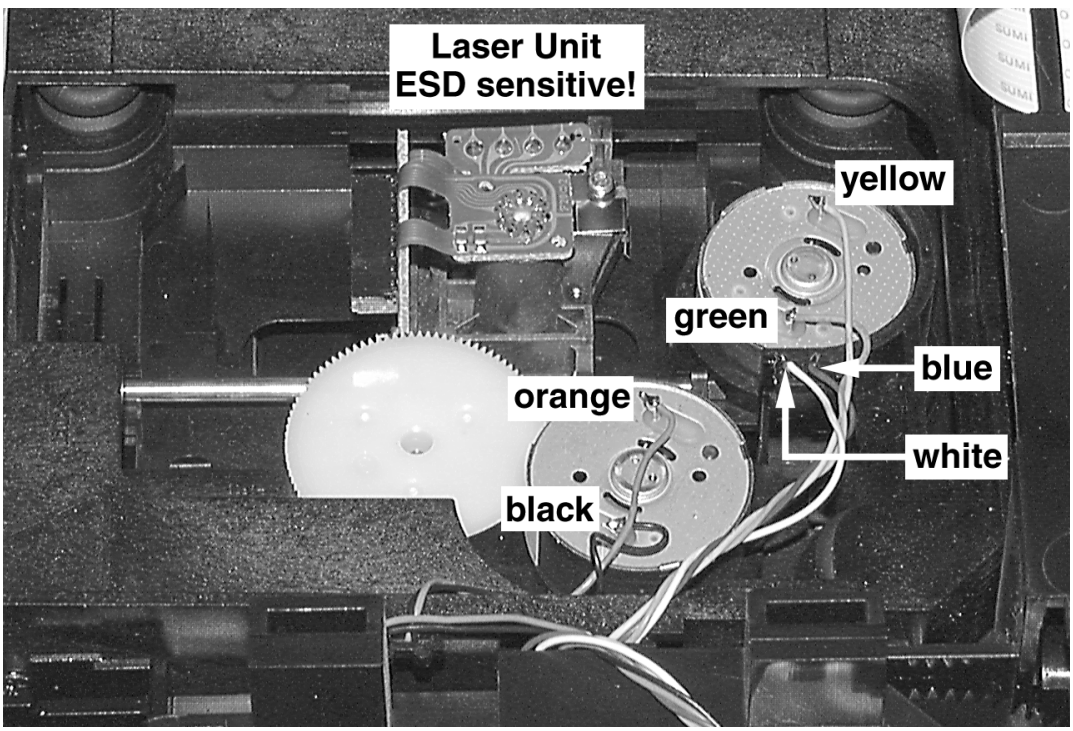

Location of switches

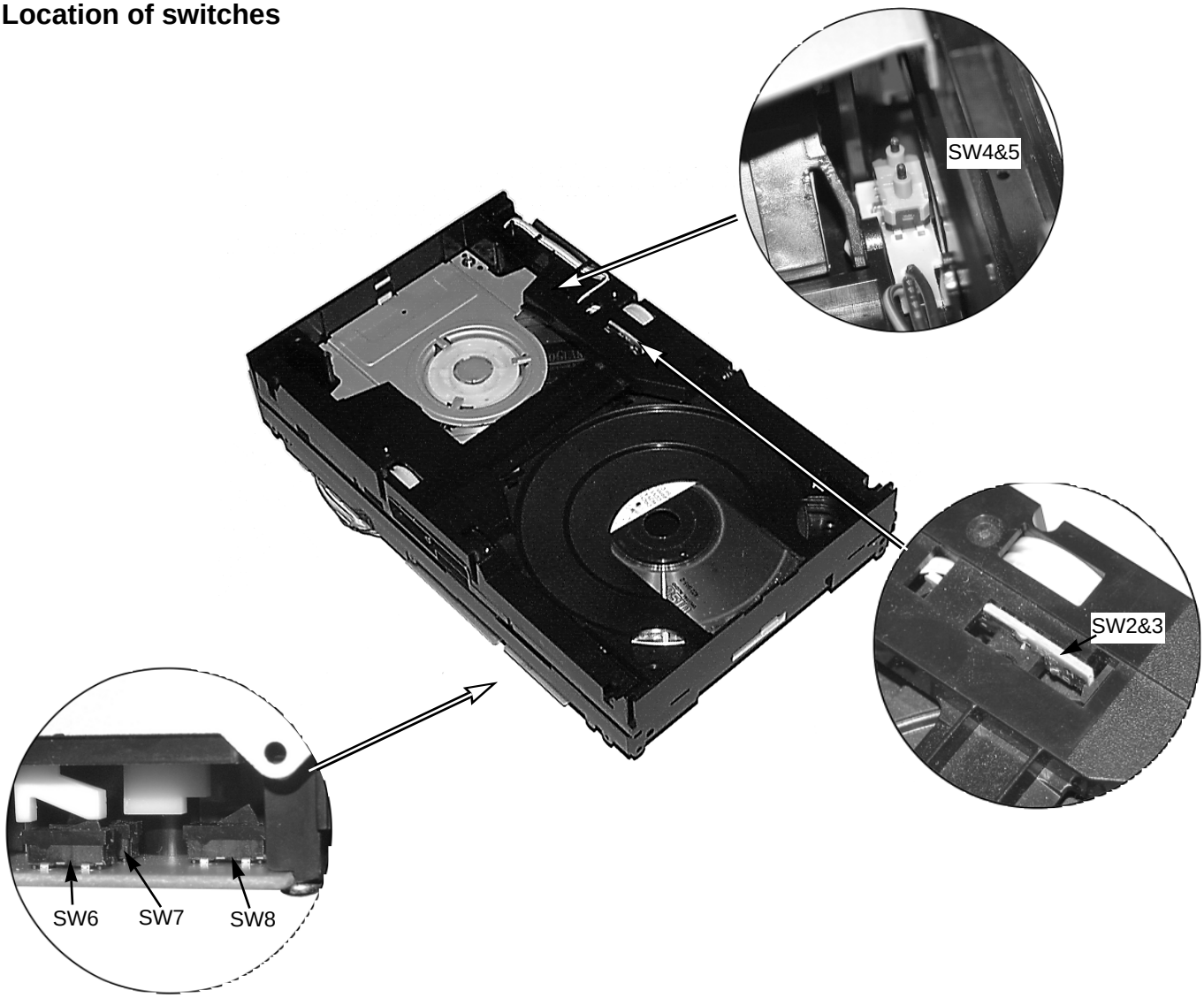

Truth Table

	Register output / Switch							
	Q0	**Q1**	**Q2**	**Q3**	**Q4**	**Q5**	**Q6**	**Q7**
Function	**SW 8**	**SW 7**	**SW 6**	**SW 5**	**SW 4**	**SW 3**	**SW 2**	**-**
Slider reverse recognition	1	0	0	0	0	0	0	X
Slider forward recognition	0	1	0	0	0	0	0	X
Drawer closed recognition	0	0	1	0	0	0	0	X
No carriage under clamper	0	0	0	0	0	0	0	X
Carriage #1 under clamper	0	0	0	0	1	0	0	X
Carriage #2 under clamper	0	0	0	1	0	0	0	X
Carriage #3 under clamper	0	0	0	1	1	0	0	X
Carriage home recognition	0	0	0	0	0	1	0	X
Carriage extra recognition	0	0	0	0	0	0	1	X

10-5

BLOCK DIAGRAM 3DTC

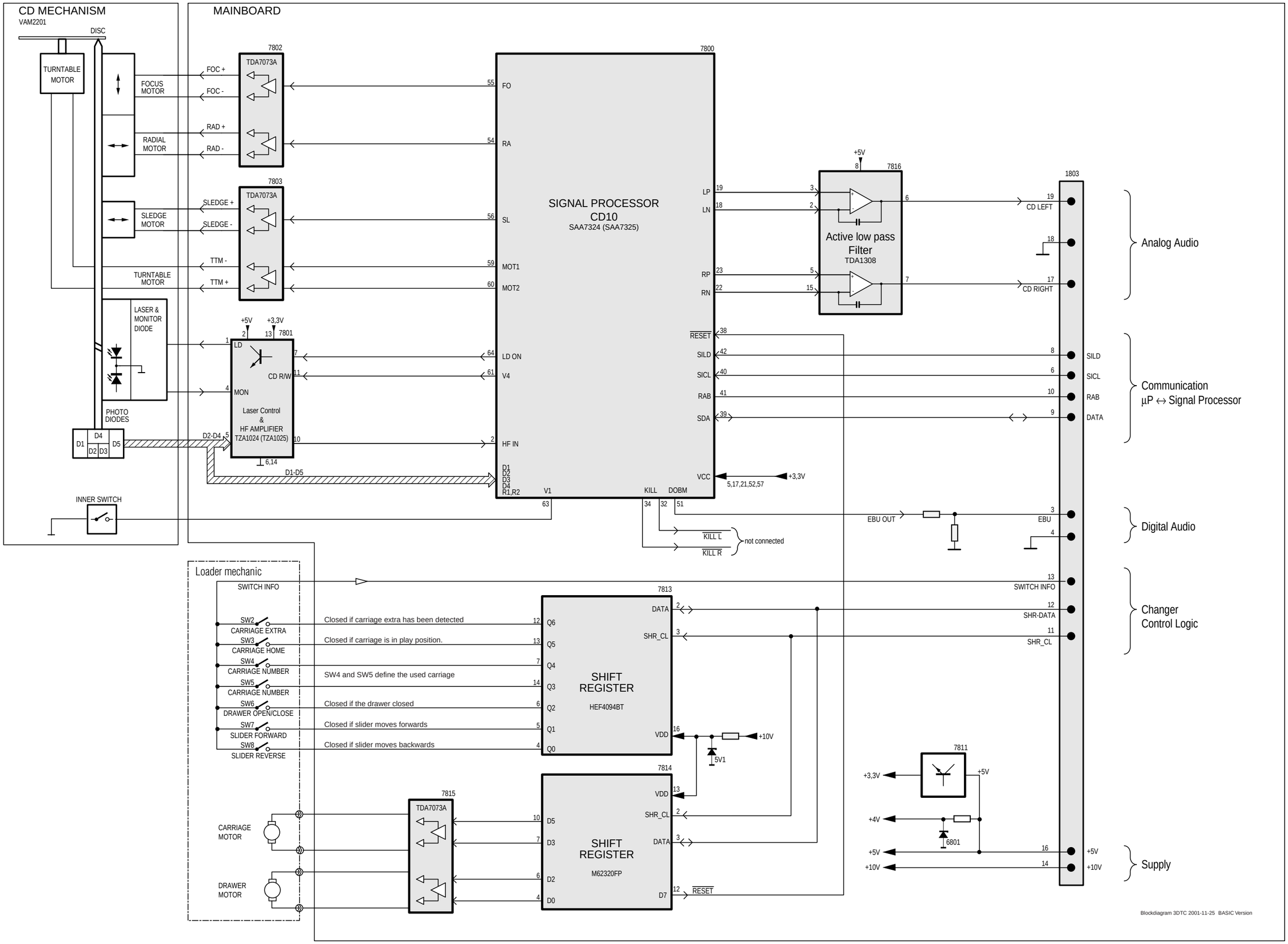

10-6

1800 D1 2818 C5 2863 A6 3887 A5 9804 A2 9824 C1 9833 G2 9843 B3 9854 G5 9864 C7 9875 F6 9885 E7 9894 C4
1801 A4 2830 C2 2864 A7 3888 A5 9805 G7 9825 C1 9834 B1 9844 B2 9855 B4 9865 C7 9876 G6 9886 D7 9895 C5
1802 C4 2839 C3 2866 C6 3899 G1 9806 C3 9826 B3 9836 C1 9845 C3 9856 D2 9866 E7 9877 D7 9887 D7 9896 C1
1803 G5 2843 C2 2868 C5 5800 G5 9807 F5 9827 E1 9837 C1 9847 D3 9857 D2 9869 D7 9878 E7 9888 D2 9897 D6
1804 G2 2845 C4 2886 B5 7802 E2 9808 C7 9828 F1 9838 D3 9848 E3 9858 D3 9870 B7 9879 E7 9889 C5 9898 D6
1805 G3 2847 C3 2891 B6 7803 A6 9809 B7 9829 F1 9839 E7 9849 E3 9859 F4 9871 B7 9880 E7 9890 B4 C800 A1
1806 C7 2851 E2 3779 G4 7815 G3 9821 E1 9830 F2 9840 F6 9850 F4 9860 F4 9872 D7 9882 D5 9891 G7
2701 G4 2858 E3 3862 D2 9801 F6 9822 E1 9831 F2 9841 F6 9851 F3 9862 D6 9873 F5 9883 D5 9892 F7
2706 E2 2860 E4 3873 E1 9802 G5 9823 C1 9832 G3 9842 B4 9852 G4 9863 C7 9874 F6 9884 F6 9893 F7

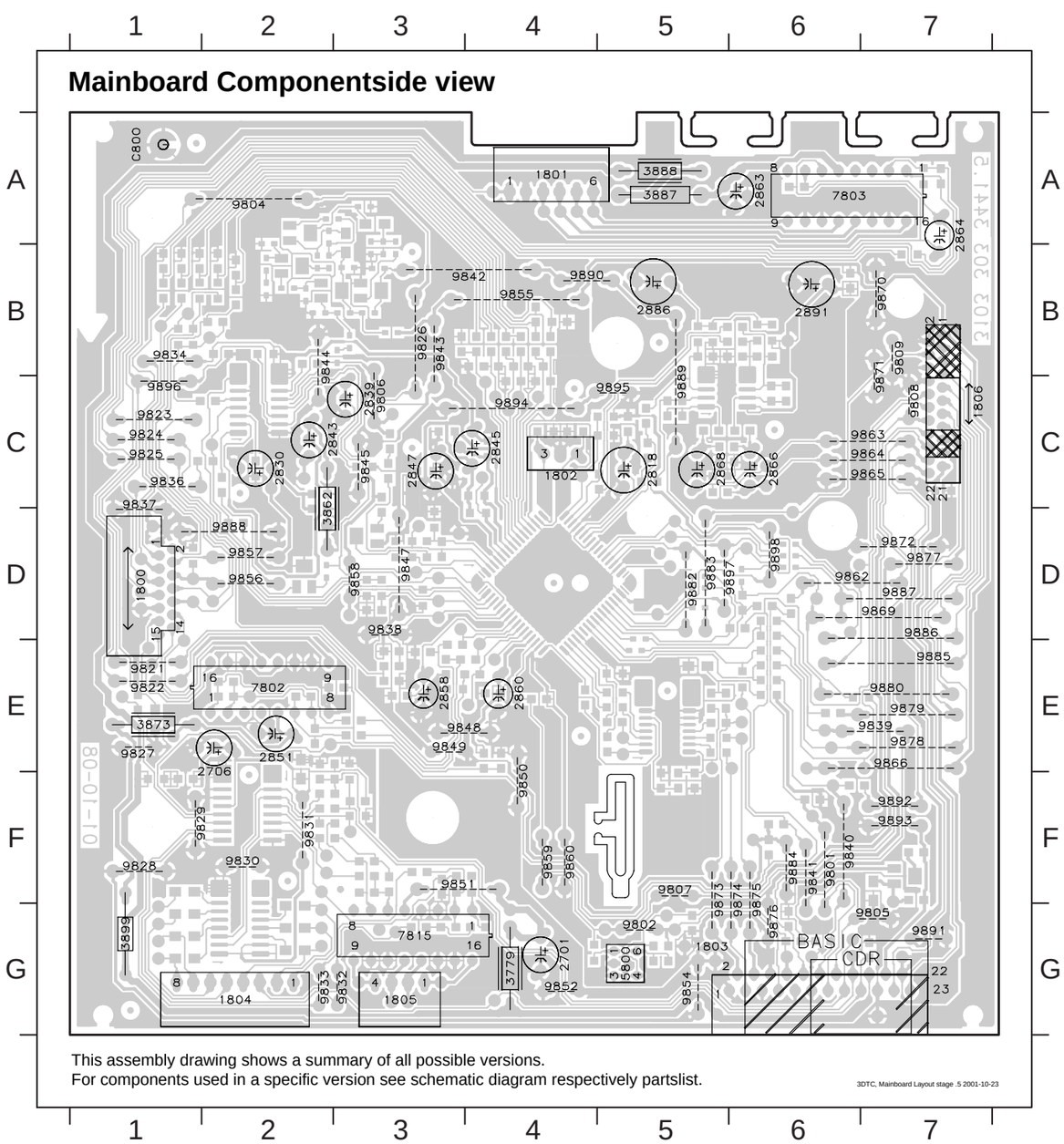

This assembly drawing shows a summary of all possible versions.
For components used in a specific version see schematic diagram respectively partslist.

2700 B3 2816 F4 2846 C2 2878 B5 3701 F2 3727 D6 3745 C5 3761 F5 3778 B3 3795 F2 3818 F4 3848 C6 3864 E3 3880 D3 6804 A2 7811 B7
2703 B3 2817 E5 2848 C3 2879 A4 3702 E6 3728 D5 3746 C5 3762 F6 3780 B1 3796 F3 3820 F2 3849 C6 3865 C6 3881 D3 6805 A2 7812 C5
2704 B2 2819 E4 2849 D3 2880 A5 3703 E6 3729 D6 3747 C5 3763 F5 3781 B3 3797 G2 3821 F4 3850 D6 3866 D4 3882 D3 6806 A2 7813 A2
2705 F2 2820 E4 2850 E3 2881 A5 3713 F3 3730 F2 3748 C5 3764 E6 3782 B3 3805 F4 3829 D2 3851 F1 3867 E3 3883 C3 6807 B1 7814 B2
2707 F3 2821 F2 2852 C4 2882 B5 3715 C6 3731 G3 3750 C5 3765 E5 3783 A7 3806 F4 3830 E2 3852 D6 3868 E3 3884 G7 6808 A1 7816 E5
2710 F3 2822 F4 2853 D3 2885 F6 3716 C6 3733 B7 3751 C5 3766 F3 3784 B2 3807 F1 3831 F2 3853 F2 3869 C3 3885 C3 6809 A1 7817 F2
2711 F2 2828 F2 2854 D3 2887 F6 3717 D6 3735 B7 3752 C4 3768 F3 3785 G2 3808 F4 3833 F4 3854 B6 3870 C4 3886 C4 6810 A1 7818 F2
2712 B3 2829 F3 2855 C2 2888 F5 3718 B6 3736 C6 3753 A6 3770 F3 3786 B1 3809 F1 3835 F2 3855 F2 3871 C2 3889 C3 6811 C2 7819 G2
2713 F3 2831 D5 2856 C3 2889 E6 3719 E5 3737 B5 3754 B6 3771 B3 3787 B3 3810 F4 3836 F1 3856 F2 3872 C4 3890 G6 6812 C1 7820 F3
2810 E4 2832 E2 2859 D3 2890 E5 3720 E5 3738 C5 3755 F6 3772 B2 3788 B2 3811 D2 3840 D6 3857 D6 3874 D3 3891 C3 6813 G3
2811 F1 2833 D5 2861 G7 2892 E5 3722 F2 3740 C5 3756 F6 3773 A4 3789 B2 3812 D2 3841 C4 3858 D6 3875 E3 3892 F7 6814 G3
2812 F4 2834 D1 2862 C3 2893 E7 3723 A6 3741 C5 3757 F6 3774 B3 3790 B3 3813 F4 3844 D5 3859 E2 3876 C3 3893 E3 7800 D4
2813 E4 2836 E2 2865 C3 2894 E5 3724 A6 3742 C5 3758 E5 3775 B3 3791 B3 3814 E5 3845 C5 3860 D6 3877 C3 3897 F3 7801 E2
2814 F1 2842 E4 2867 E5 2895 E5 3725 B6 3743 C4 3759 E5 3776 A3 3793 F3 3816 E5 3846 C1 3861 E2 3878 C4 6801 B7 7804 D3
2815 F1 2844 D3 2869 E5 3700 G2 3726 D6 3744 A5 3760 F6 3777 A3 3794 F2 3817 F1 3847 C6 3863 E4 3879 C2 6802 C5 7806 D2

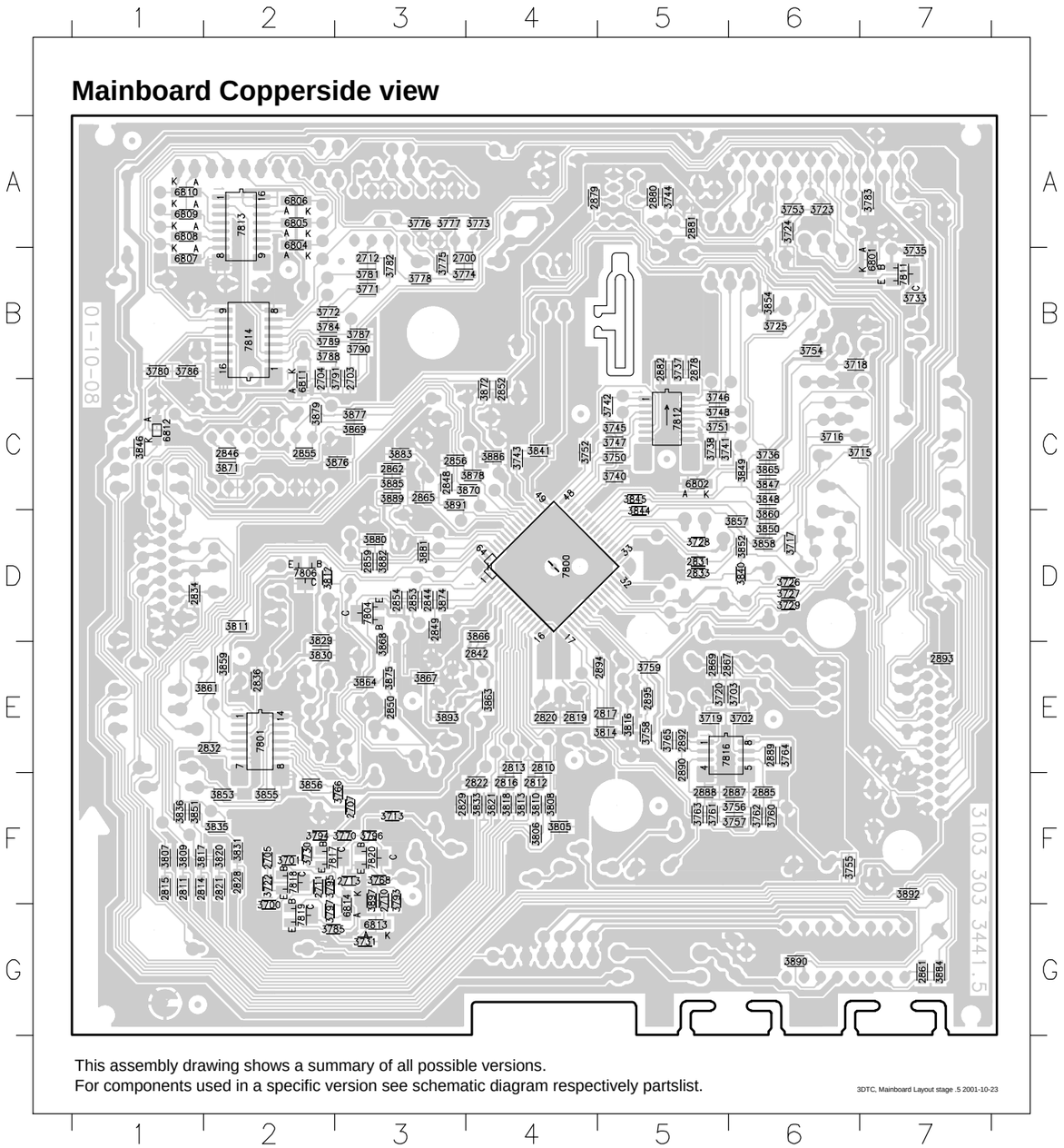

This assembly drawing shows a summary of all possible versions.
For components used in a specific version see schematic diagram respectively partslist.

3DTC, Mainboard Layout stage .5 2001-10-23

10-7

1800	C1	2813	A5	2822	B5	2834	E4	2848	F5	2859	H5	2864	I4	3810	A4	3821	B4	3835	D4	3856	D8	3869	F5	3876	B9	3884	H5	3890	I5	7801	D6
1801	I1	2814	B4	2828	C4	2836	D6	2851	F4	2860	B9	2865	I5	3813	A4	3829	C2	3836	C4	3859	E4	3870	F6	3877	G5	3885	H6	3891	I6	7802	G3
2810	A5	2815	A4	2829	C5	2839	E8	2852	B8	2861	H4	3807	A3	3817	B4	3830	C2	3846	F8	3861	D4	3871	F5	3878	G6	3886	A10	3892	I5	7803	I3
2811	A4	2816	B5	2830	C2	2843	E5	2855	G4	2862	H5	3808	A4	3818	B4	3831	B4	3851	C4	3862	E5	3872	B9	3879	G5	3887	H4	3899	F5		
2812	A4	2821	B4	2832	D5	2846	F4	2856	G5	2863	H4	3809	A3	3820	B4	3833	B4	3855	D8	3864	E8	3873	F4	3882	H5	3888	H5	6812	F8		

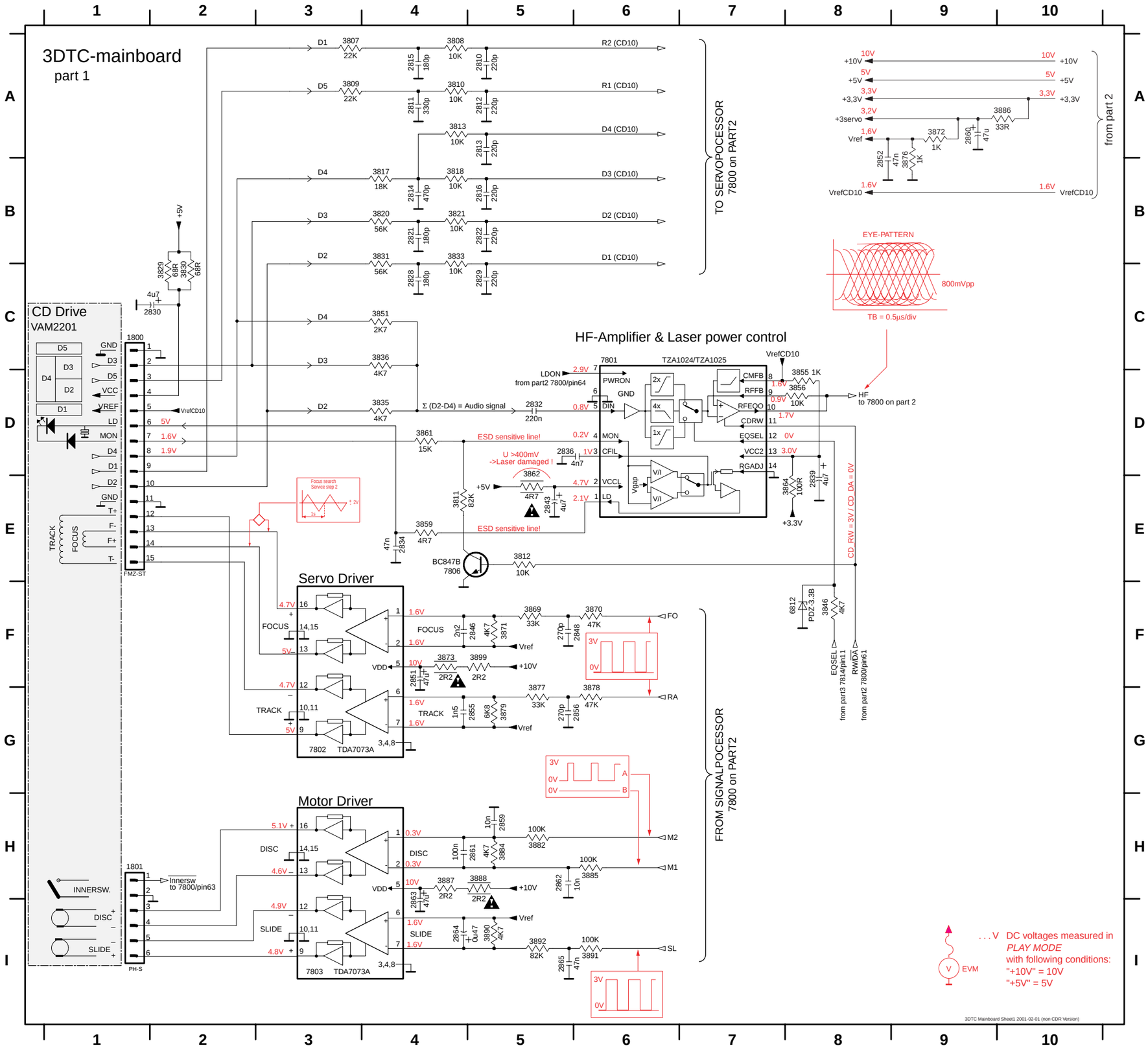

10-8

1800 D1 2818 C5 2863 A6 3887 A5 9804 A2 9824 C1 9833 G2 9843 B3 9854 G5 9864 C7 9875 F6 9885 E7 9894 C4
1801 A4 2830 C2 2864 A7 3888 A5 9805 G7 9825 C1 9834 B1 9844 B2 9855 B4 9865 C7 9876 G6 9886 D7 9895 C5
1802 C4 2839 C3 2866 C6 3899 G1 9806 C3 9826 B3 9836 C1 9845 C3 9856 D2 9866 E7 9877 D7 9887 D7 9896 C1
1803 G5 2843 C2 2868 C5 5800 G5 9807 F5 9827 E1 9837 C1 9847 D3 9857 D2 9869 D7 9878 E7 9888 D2 9897 D6
1804 G2 2845 C4 2886 B5 7802 E2 9808 C7 9828 F1 9838 D3 9848 E3 9858 D3 9870 B7 9879 E7 9889 C5 9898 D6
1805 G3 2847 C3 2891 B6 7803 A6 9809 B7 9829 F1 9839 E7 9849 E3 9859 F4 9871 B7 9880 E7 9890 B4 C800 A1
1806 C7 2851 E2 3779 G4 7815 G3 9821 E1 9830 F2 9840 F6 9850 F4 9860 F4 9872 D7 9882 D5 9891 G7
2701 G4 2858 E3 3862 D2 9801 F6 9822 E1 9831 F2 9841 F6 9851 F3 9862 D6 9873 F5 9883 D5 9892 F7
2706 E2 2860 E4 3873 E1 9802 G5 9823 C1 9832 G3 9842 B4 9852 G4 9863 C7 9874 F6 9884 F6 9893 F7

2700 B3 2816 F4 2846 C2 2878 B5 3701 F2 3727 D6 3745 C5 3761 F5 3778 B3 3795 F2 3818 F4 3848 C6 3864 E3 3880 D3 6804 A2 7811 B7
2703 B3 2817 E5 2848 C3 2879 A4 3702 E6 3728 D5 3746 C5 3762 F6 3780 B1 3796 F3 3820 F2 3849 C6 3865 C6 3881 D3 6805 A2 7812 C5
2704 B2 2819 E4 2849 D3 2880 A5 3703 E6 3729 D6 3747 C5 3763 F5 3781 B3 3797 G2 3821 F4 3850 D6 3866 D4 3882 D3 6806 A2 7813 A2
2705 F2 2820 E4 2850 E3 2881 A5 3713 F3 3730 F2 3748 C5 3764 E6 3782 B3 3805 F4 3829 D2 3851 F1 3867 E3 3883 C3 6807 B1 7814 B2
2707 F3 2821 F2 2852 C4 2882 B5 3715 C6 3731 G3 3750 C5 3765 E5 3783 A7 3806 F4 3830 E2 3852 D6 3868 E3 3884 G7 6808 A1 7816 E5
2710 F3 2822 F4 2853 D3 2885 F6 3716 C6 3733 B7 3751 C5 3766 F3 3784 B2 3807 F1 3831 F2 3853 F2 3869 C3 3885 C3 6809 A1 7817 F2
2711 F2 2828 F2 2854 D3 2887 F6 3717 D6 3735 B7 3752 C4 3768 F3 3785 G2 3808 F4 3833 F4 3854 B6 3870 C4 3886 C4 6810 A1 7818 F2
2712 B3 2829 F3 2855 C2 2888 F5 3718 B6 3736 C6 3753 A6 3770 F3 3786 B1 3809 F1 3835 F2 3855 F2 3871 C2 3889 C3 6811 C2 7819 G2
2713 F3 2831 D5 2856 C3 2889 E6 3719 E5 3737 B5 3754 B6 3771 B3 3787 B3 3810 F4 3836 F1 3856 F2 3872 C4 3890 G6 6812 C1 7820 F3
2810 E4 2832 E2 2859 D3 2890 E5 3720 E5 3738 C5 3755 F6 3772 B2 3788 B2 3811 D2 3840 D6 3857 D6 3874 D3 3891 C3 6813 G3
2811 F1 2833 D5 2861 G7 2892 E5 3722 F2 3740 C5 3756 F6 3773 A4 3789 B2 3812 D2 3841 C4 3858 D6 3875 E3 3892 F7 6814 G3
2812 F4 2834 D1 2862 C3 2893 E7 3723 A6 3741 C5 3757 F6 3774 B3 3790 B3 3813 F4 3844 D5 3859 E2 3876 C3 3893 E3 7800 D4
2813 E4 2836 E2 2865 C3 2894 E5 3724 A6 3742 C5 3758 E5 3775 B3 3791 B3 3814 E5 3845 C5 3860 D6 3877 C3 3897 F3 7801 E2
2814 F1 2842 E4 2867 E5 2895 E5 3725 B6 3743 C4 3759 E5 3776 A3 3793 F3 3816 E5 3846 C1 3861 E2 3878 C4 6801 B7 7804 D3
2815 F1 2844 D3 2869 E5 3700 G2 3726 D6 3744 A5 3760 F6 3777 A3 3794 F2 3817 F1 3847 C6 3863 E4 3879 C2 6802 C5 7806 D2

Mainboard Componentside view

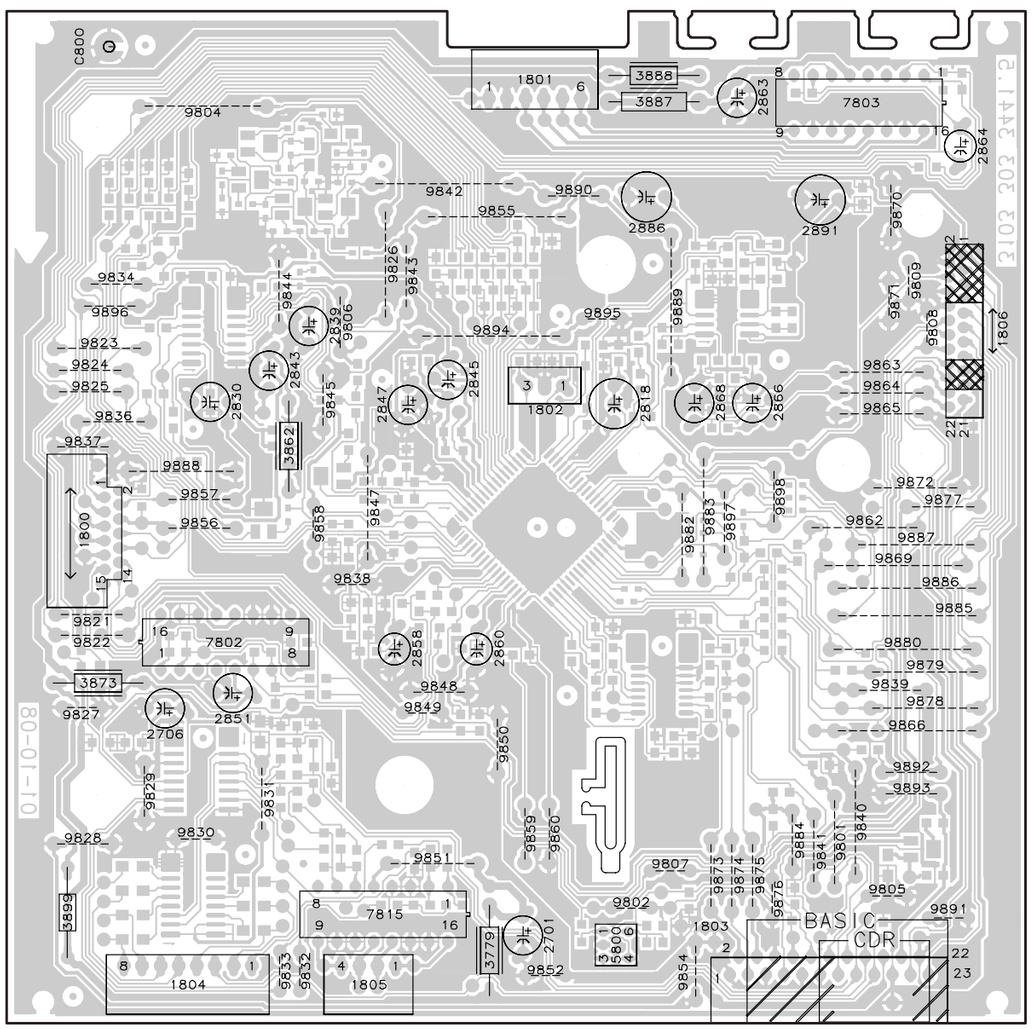

This assembly drawing shows a summary of all possible versions.
For components used in a specific version see schematic diagram respectively partslist.

3DTC, Mainboard Layout stage .5 2001-10-23

Mainboard Copperside view

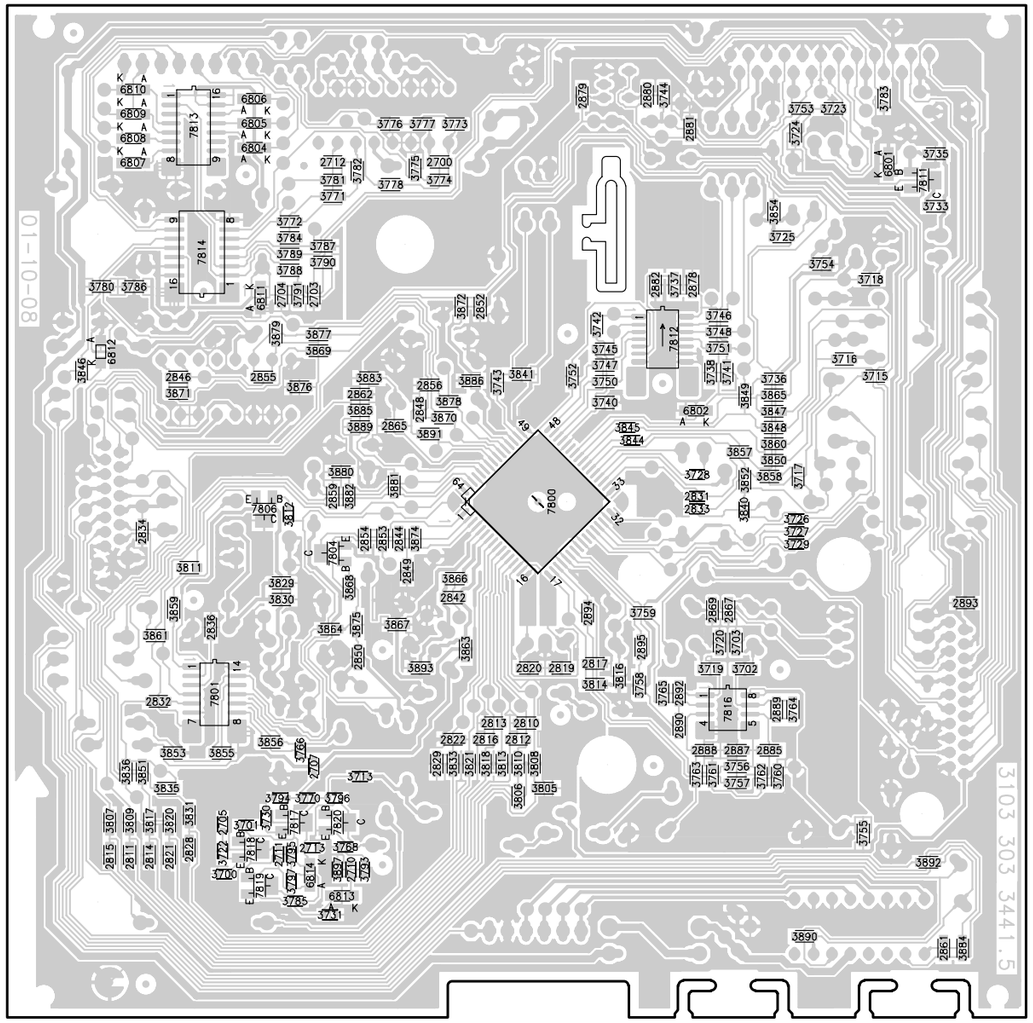

This assembly drawing shows a summary of all possible versions.
For components used in a specific version see schematic diagram respectively partslist.

3DTC, Mainboard Layout stage .5 2001-10-23

10-9

1802	B6	2819	B6	2842	B4	2850	A3	2866	C12	2885	C10	2889	C10	2893	B12	3703	C12	3735	F11	3756	C9	3760	B9	3764	C11	3841	I11	3853	A4	3860	G5	3867	A4	3883	D2	7816-A	D11
1803	F14	2820	B6	2845	A4	2853	B3	2867	C12	2886	B9	2890	D10	2894	C7	3719	D12	3743	I11	3757	C9	3761	B9	3765	D11	3844	F5	3854	G6	3863	A4	3874	B3	6801	F10	7816-B	C10
2817	C7	2831	G5	2847	B4	2854	B3	2868	D12	2887	C9	2891	B8	2895	D7	3720	D12	3754	G13	3758	D9	3762	B9	3814	B7	3845	F5	3857	G5	3865	A4	3875	A3	7800	C4		
2818	C7	2833	G5	2849	A3	2858	D3	2869	D12	2888	D9	2892	D11	3702	C12	3733	F11	3755	B8	3759	D9	3763	B9	3816	D7	3849	G5	3858	G5	3866	B4	3881	B3	7811	F10		

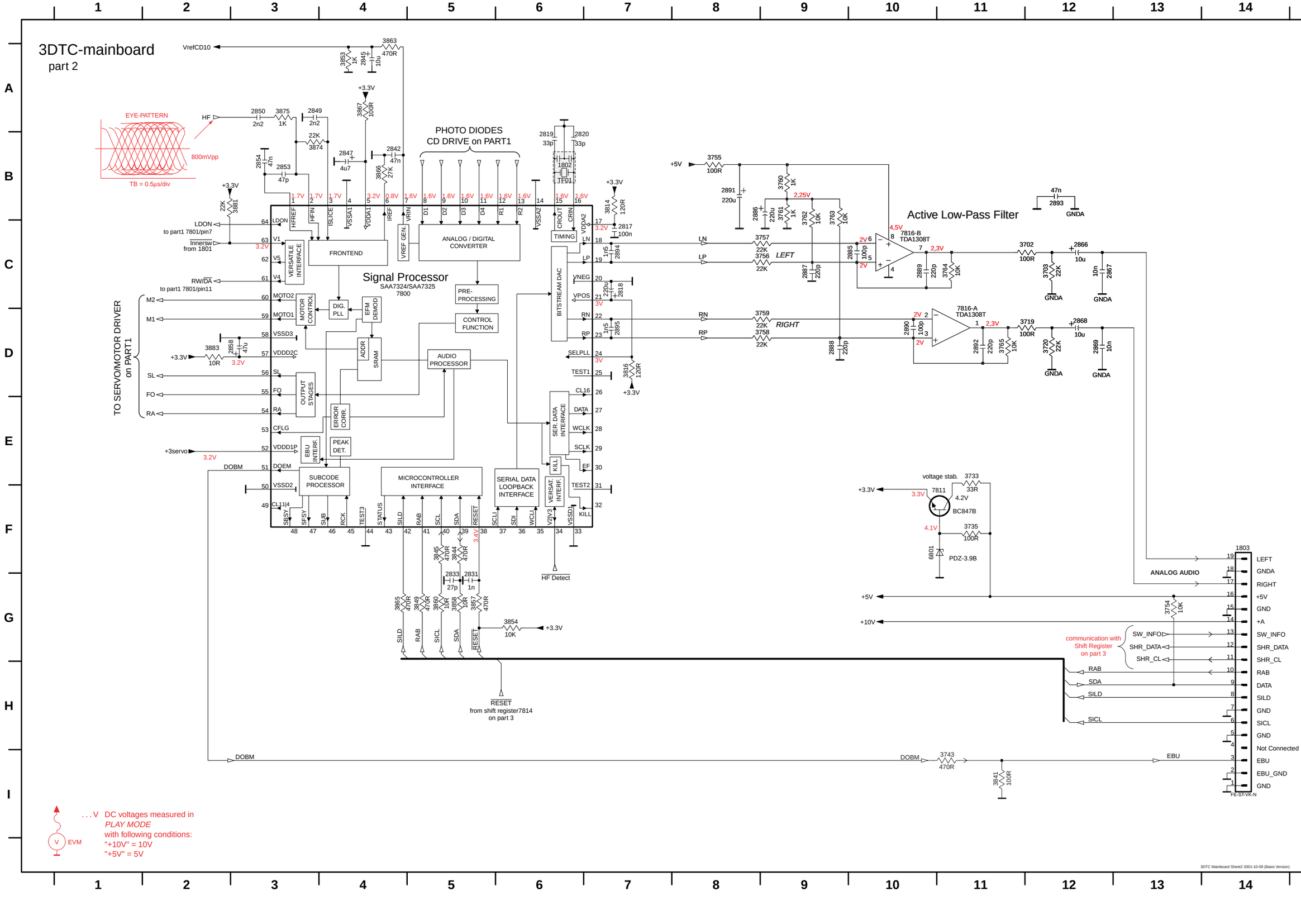

Technical remarks

10-10

1804	B2	2703	B5	3771	F4	3775	F4	3779	D4	3783	B6	3788	A4	6804	B2	6808	B2	7813	A3
1805	E1	2704	B5	3772	E4	3776	E4	3780	B3	3784	F4	3789	B4	6805	B2	6809	C2	7814	C5
2700	E3	2706	B4	3773	E4	3777	E4	3781	E4	3786	B3	3790	B5	6806	B2	6810	C2	7815	F2
2701	D3	2712	E3	3774	D4	3778	E4	3782	E4	3787	F5	3791	B5	6807	B2	6811	B3		

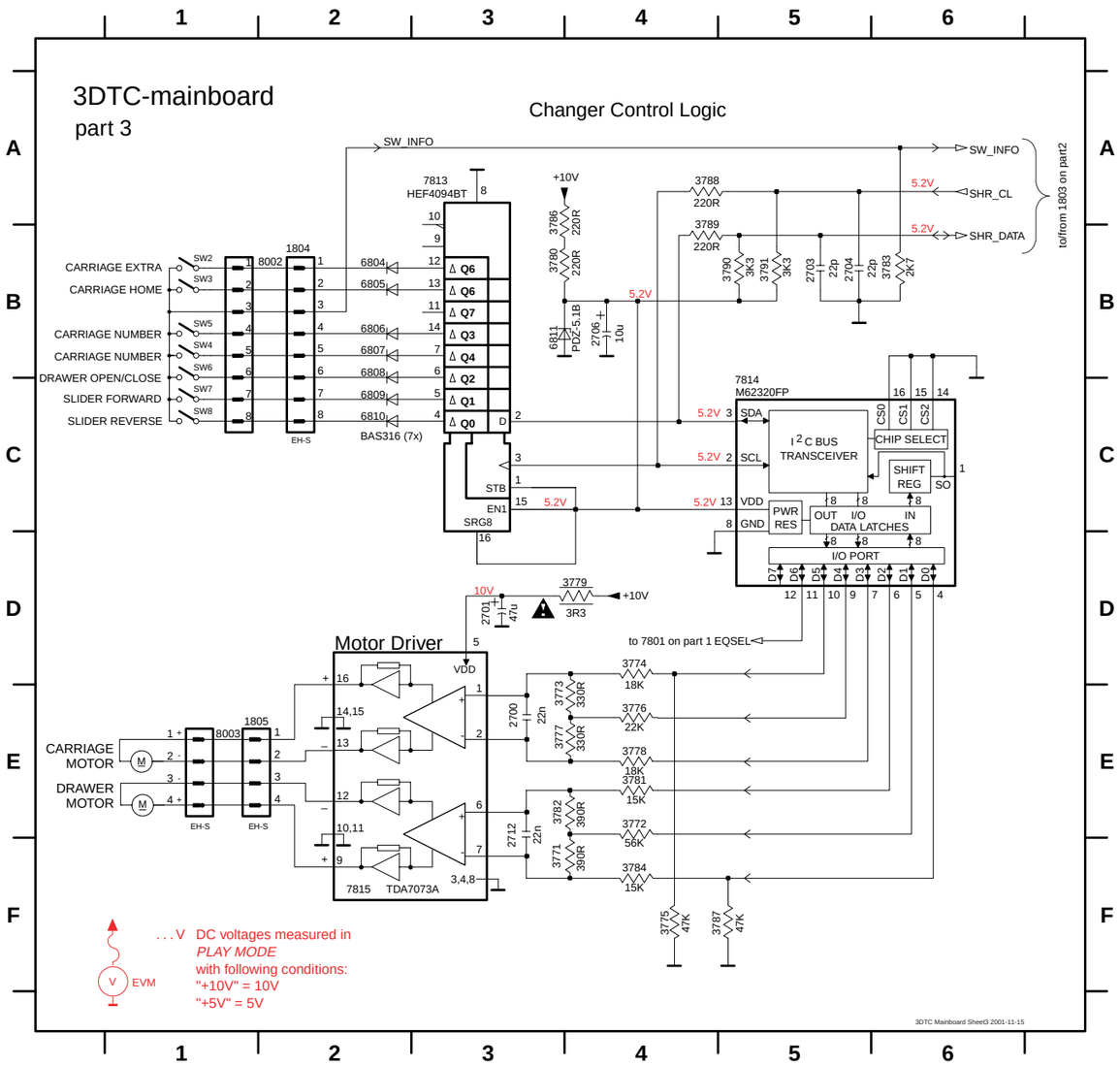

10-11

3Disc Tray Changer
Exploded view

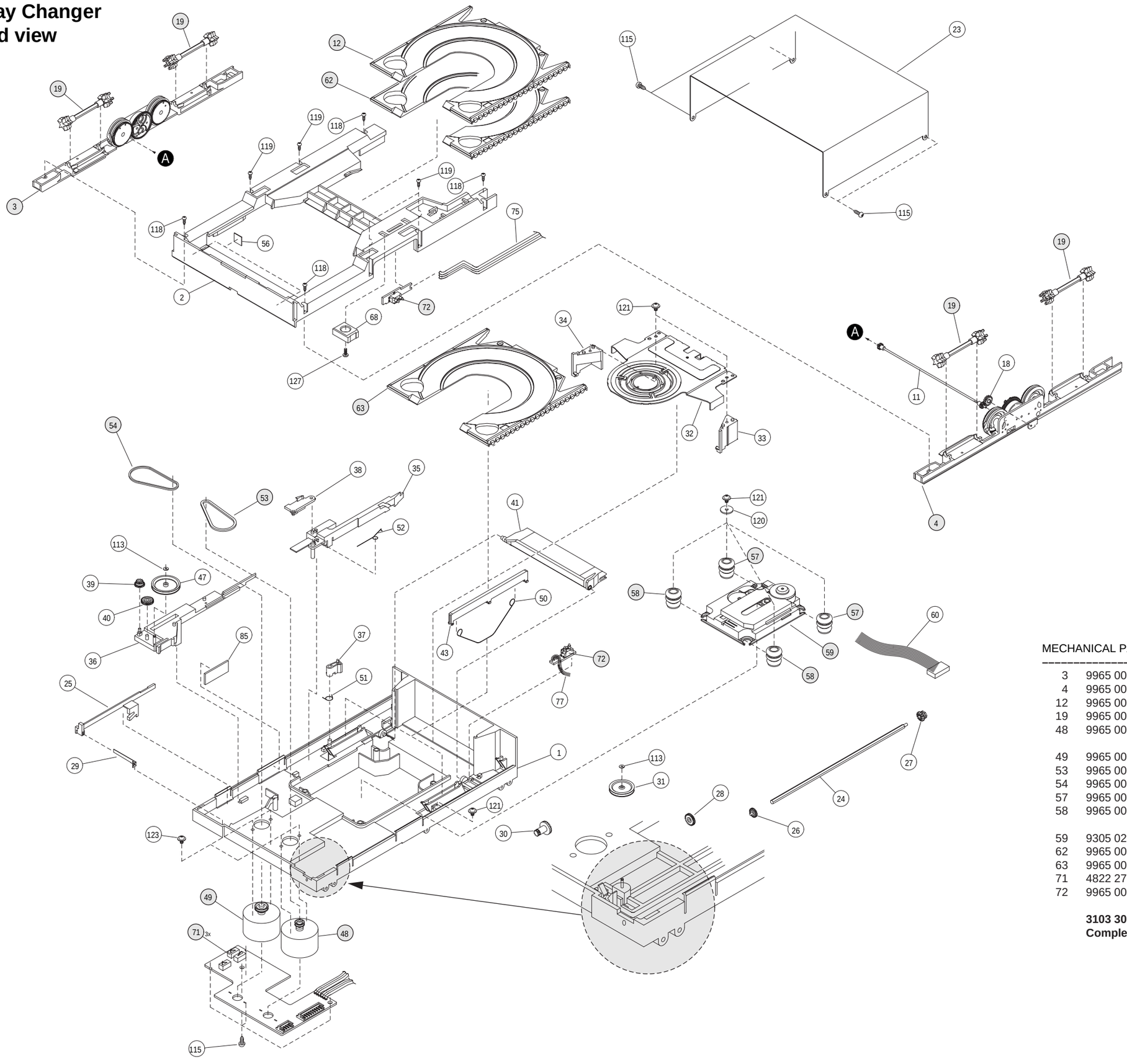

MECHANICAL PARTS

3	9965 000 06538	ASSY HOLDER LEFT
4	9965 000 06539	ASSY HOLDER RIGHT
12	9965 000 06540	ASSY CARRIAGE 1 (TOP)
19	9965 000 06541	ASSY GEAR STAR
48	9965 000 06542	ASSY MOTOR CARRIAGE
49	9965 000 06543	ASSY MOTOR DRAWER
53	9965 000 06544	BELT DRAWER
54	9965 000 06545	BELT CARRIAGE
57	9965 000 06546	DAMPER RUBBER REAR
58	9965 000 06547	DAMPER RUBBER FRONT
59	9305 022 30103	CD DRIVE VAM2201/03
62	9965 000 06548	ASSY CARRIAGE 2 (MIDDLE)
63	9965 000 06549	ASSY CARRIAGE 3 (BOTTOM)
71	4822 277 11652	SWITCH (SW6-SW8)
72	9965 000 06550	SWITCH (SW2-SW5)

3103 309 05250 3DTC CMCJ-01-13 (1xSPEED)
Complete Mechanic - CD Drive already included

10-12

ELECTRICAL PARTSLIST 3DTC MODULE Basic Version

MISCELLANEOUS

1800	4822 265 10925	FLEX FOIL CONNECTOR, 15PIN	
1803	4822 265 11545	FLEX FOIL CONNECTOR, 19PIN	
8003	3103 308 92560	FLEX FOIL CABLE 15P, 80mm	
59	9305 022 30103	CD DRIVE VAM2201/03	

CAPACITORS

2700 ©	4822 126 14494	22nF	10%	25V	
2701	4822 124 40433	47µF	20%	25V	
2703 ©	5322 122 32658	22pF	5%	50V	
2704 ©	4822 122 33761	22pF	5%	50V	
2706	4822 124 22833	10µF	20%	50V	
2712 ©	4822 126 14494	22nF	10%	25V	
2810 ©	4822 126 13883	220pF	5%	50V	
2811 ©	4822 126 14241	330pF		50V	
2812 ©	4822 126 13883	220pF	5%	50V	
2813 ©	4822 126 13883	220pF	5%	50V	
2814 ©	4822 126 13881	470pF	5%	50V	
2815 ©	4822 126 14508	180pF	5%	50V	
2816 ©	4822 126 13883	220pF	5%	50V	
2817 ©	4822 126 14585	100nF	10%	50V	
2818	4822 124 42383	220µF	20%	4V	
2819 ©	5322 122 32659	33pF	5%	50V	
2820 ©	5322 122 32659	33pF	5%	50V	
2821 ©	4822 126 14508	180pF	5%	50V	
2822 ©	4822 126 13883	220pF	5%	50V	
2828 ©	4822 126 14508	180pF	5%	50V	
2829 ©	4822 126 13883	220pF	5%	50V	
2830	4822 124 40769	4,7µF	20%	100V	
2831 ©	5322 126 11578	1nF	10%	63V	
2832 ©	4822 126 13879	220nF	20%	16V	
2833 ©	4822 126 11669	27pF	10%	50V	
2834 ©	4822 126 13751	47nF	10%	50V	
2836 ©	4822 126 13193	4,7nF	10%	63V	
2839	4822 124 40769	4,7µF	20%	100V	
2842 ©	4822 126 13751	47nF	10%	50V	
2843	4822 124 40769	4,7µF	20%	100V	
2845	4822 124 40248	10µF	20%	63V	
2846 ©	4822 126 14238	2,2nF	10%	50V	
2847	4822 124 40769	4,7µF	20%	100V	
2848 ©	4822 126 14506	270pF	5%	50V	
2849 ©	4822 122 33177	10nF	20%	50V	
2850 ©	4822 126 14238	2,2nF	10%	50V	
2851	4822 124 40433	47µF	20%	25V	
2852 ©	3198 024 44730	47nF	5%	50V	
2853 ©	4822 126 13694	68pF	1%	63V	
2854 ©	4822 126 13751	47nF	10%	50V	
2855 ©	4822 126 14247	1,5nF	10%	50V	
2856 ©	4822 122 33216	270pF	5%	50V	
2858	4822 124 12362	47µF	20%	4V	
2859 ©	4822 122 33177	10nF	20%	50V	
2860	4822 124 12362	47µF	20%	4V	
2861 ©	4822 126 14585	100nF	10%	50V	
2862 ©	5322 126 11583	10nF	10%	63V	
2863	4822 124 40433	47µF	20%	25V	
2864	5322 124 41948	0,47µF	20%	50V	
2865 ©	3198 024 44730	47nF	5%	50V	
2866	3198 028 41090	10µF	20%	35V	
2867 ©	4822 122 33177	10nF	20%	50V	
2868	3198 028 41090	10µF	20%	35V	
2869 ©	4822 122 33177	10nF	20%	50V	
2885 ©	4822 122 31765	100pF	5%	50V	
2886	4822 124 42383	220µF	20%	4V	
2887 ©	4822 126 13883	220pF	5%	50V	
2888 ©	4822 126 13883	220pF	5%	50V	
2889 ©	4822 126 13883	220pF	5%	50V	
2890 ©	4822 122 31765	100pF	5%	50V	

CAPACITORS

2891	4822 124 42383	220µF	20%	4V	
2892 ©	4822 126 13883	220pF	5%	50V	
2893 ©	4822 126 13751	47nF	10%	50V	
2894 ©	4822 126 13344	1,5nF	5%	63V	
2895 ©	4822 126 13344	1,5nF	5%	63V	

RESISTORS

3702 ©	4822 051 30101	100Ω	5%	0,06W
3703 ©	4822 051 30223	22kΩ	5%	0,06W
3719 ©	4822 051 30101	100Ω	5%	0,06W
3720 ©	4822 051 30223	22kΩ	5%	0,06W
3733 ©	4822 051 30339	33Ω	5%	0,06W
3735 ©	4822 051 30101	100Ω	5%	0,06W
3743 ©	4822 051 30471	470Ω	5%	0,06W
3754 ©	4822 051 30103	10kΩ	5%	0,06W
3755 ©	4822 051 30101	100Ω	5%	0,06W
3756 ©	4822 051 30223	22kΩ	5%	0,06W
3757 ©	4822 051 30223	22kΩ	5%	0,06W
3758 ©	4822 051 30223	22kΩ	5%	0,06W
3759 ©	4822 051 20223	22kΩ	5%	0,1W
3760 ©	4822 051 10102	1kΩ	2%	0,25W
3761 ©	4822 051 10102	1kΩ	2%	0,25W
3762 ©	4822 117 10833	10kΩ	1%	0,1W
3763 ©	4822 117 10833	10kΩ	1%	0,1W
3764 ©	4822 051 30103	10kΩ	5%	0,06W
3765 ©	4822 051 30103	10kΩ	5%	0,06W
3771 ©	4822 051 30391	390Ω	5%	0,06W
3772 ©	4822 051 30563	56kΩ	5%	0,06W
3773 ©	4822 051 30331	330Ω	5%	0,06W
3774 ©	4822 051 30183	18kΩ	5%	0,06W
3775 ©	4822 117 12925	47kΩ	1%	0,06W
3776 ©	4822 051 30223	22kΩ	5%	0,06W
3777 ©	4822 051 30331	330Ω	5%	0,06W
3778 ©	4822 051 30183	18kΩ	5%	0,06W
3779 ⚠	4822 052 10338	3,3Ω		NFR25
3780 ©	4822 117 11503	220Ω	5%	0,1W
3781 ©	4822 051 30153	15kΩ	5%	0,06W
3782 ©	4822 051 30391	390Ω	5%	0,06W
3783 ©	4822 051 30272	2,7kΩ	5%	0,06W
3784 ©	4822 051 30153	15kΩ	5%	0,06W
3786 ©	4822 051 30221	220Ω	5%	0,06W
3787 ©	4822 117 10834	47kΩ	1%	0,1W
3788 ©	4822 051 30221	220Ω	5%	0,06W
3789 ©	4822 051 30221	220Ω	5%	0,06W
3790 ©	4822 051 20332	3,3kΩ	5%	0,06W
3791 ©	4822 051 20332	3,3kΩ	5%	0,06W
3807 ©	4822 051 30223	22kΩ	5%	0,06W
3808 ©	4822 051 30103	10kΩ	5%	0,06W
3809 ©	4822 051 30223	22kΩ	5%	0,06W
3810 ©	4822 051 30103	10kΩ	5%	0,06W
3811 ©	4822 117 12864	82kΩ	5%	0,6W
3812 ©	4822 117 10833	10kΩ	1%	0,1W
3813 ©	4822 051 30103	10kΩ	5%	0,06W
3814 ©	4822 051 20121	120Ω	5%	0,1W
3816 ©	4822 051 30121	120Ω	5%	0,06W
3817 ©	4822 051 20273	27kΩ	5%	0,1W
3818 ©	4822 051 30103	10kΩ	5%	0,06W
3820 ©	4822 117 11148	56kΩ	1%	0,1W
3821 ©	4822 051 30103	10kΩ	5%	0,06W
3822 ©	4822 051 30103	10kΩ	5%	0,06W
3823 ©	4822 051 30103	10kΩ	5%	0,06W
3829 ©	4822 051 30689	68Ω	5%	0,06W
3830 ©	4822 051 30689	68Ω	5%	0,06W
3831 ©	4822 051 30563	56kΩ	5%	0,06W

RESISTORS

3833 ©	4822 051 30103	10kΩ	5%	0,06W
3835 ©	4822 051 30472	4,7kΩ	5%	0,06W
3836 ©	4822 051 20472	4,7kΩ	5%	0,1W
3841 ©	4822 051 30101	100Ω	5%	0,06W
3844 ©	4822 051 30471	470Ω	5%	0,06W
3845 ©	4822 051 30471	470Ω	5%	0,06W
3846 ©	4822 051 30472	4,7kΩ	5%	0,06W
3849 ©	4822 051 20471	470Ω	5%	0,1W
3851 ©	4822 117 12955	2,7kΩ	1%	0,1W
3853 ©	4822 051 30102	1kΩ	5%	0,06W
3854 ©	4822 051 30103	10kΩ	5%	0,06W
3855 ©	4822 051 10102	1kΩ	2%	0,25W
3856 ©	4822 051 30103	10kΩ	5%	0,06W
3857 ©	4822 051 30471	470Ω	5%	0,06W
3858 ©	4822 051 30109	10Ω	5%	0,06W
3859 ©	4822 117 13608	4,7Ω	5%	0,06W
3860 ©	4822 051 20109	10Ω	5%	0,1W
3861 ©	4822 051 30153	15kΩ	5%	0,06W
3862 ⚠	4822 052 10478	4,7Ω	5%	NFR
3863 ©	4822 051 20471	470Ω	5%	0,1W
3864 ©	4822 117 11373	100R	1%	0,1W
3865 ©	4822 051 20471	470Ω	5%	0,1W
3866 ©	4822 051 20273	27kΩ	5%	0,1W
3867 ©	4822 117 11373	100R	1%	0,1W
3869 ©	4822 051 30333	33kΩ	5%	0,06W
3870 ©	4822 117 12925	47kΩ	1%	0,06W
3871 ©	4822 051 30472	4,7kΩ	5%	0,06W
3872 ©	4822 051 30102	1kΩ	5%	0,06W
3873 ⚠	4822 052 10228	2,2Ω	5%	0,33W
3874 ©	4822 051 30223	22kΩ	5%	0,06W
3875 ©	4822 051 30102	1kΩ	5%	0,06W
3876 ©	4822 051 30102	1kΩ	5%	0,06W
3877 ©	4822 051 30333	33kΩ	5%	0,06W
3878 ©	4822 117 12925	47kΩ	1%	0,06W
3879 ©	4822 051 30682	6,8kΩ	5%	0,06W
3881 ©	4822 051 20223	22kΩ	5%	0,1W
3882 ©	4822 117 10837	100kΩ	1%	0,1W
3883 ©	4822 051 30109	10Ω	5%	0,06W
3884 ©	4822 051 30472	4,7kΩ	5%	0,06W
3885 ©	4822 117 13632	100kΩ	1%	0,06W
3886 ©	4822 051 30339	33Ω	5%	0,06W
3887	4822 053 10228	2,2Ω	5%	1W
3888 ⚠	4822 052 10228	2,2Ω	5%	0,33W
3890 ©	4822 051 30472	4,7kΩ	5%	0,06W
3891 ©	4822 117 13632	100kΩ	1%	0,06W
3892 ©	4822 117 11149	82kΩ	1%	0,1W
3893 ©	4822 117 13579	220kΩ	1%	0,1W
3899	4822 116 81154	2,2Ω	5%	0,5W

COILS

1802	2422 543 01068	RESONATOR 8MHZ

DIODES

6801 ©	9322 129 34685	BZX284-C3V9
6804 ©	4822 130 11397	BAS316
6805 ©	4822 130 11397	BAS316
6806 ©	4822 130 11397	BAS316
6807 ©	4822 130 11397	BAS316
6808 ©	4822 130 11397	BAS316
6809 ©	4822 130 11397	BAS316
6810 ©	4822 130 11397	BAS316
6811 ©	9340 548 52115	BZX284-C5V1
6812 ©	9340 548 47115	PDZ3,3B

TRANSISTORS

7806 ©	4822 130 60511	BC847B
7811 ©	4822 130 60511	BC847B

INTEGRATED CIRCUITS

7800 ©	9352 641 80557	SAA7324H/M2B, CD10 Signal processor
7801 ©	9352 622 36118	TZA1025T/V2 HF-Amplifier
7802	4822 209 32852	TDA7073A/N2
7803	4822 209 32852	TDA7073A/N2
7813	5322 209 11306	HEF4094BT
7814 ©	4822 209 17345	M62320FP, I2C SHIFT REGISTER
7815	4822 209 32852	TDA7073A/N2
7816 ©	4822 209 33165	TDA1308T/N1

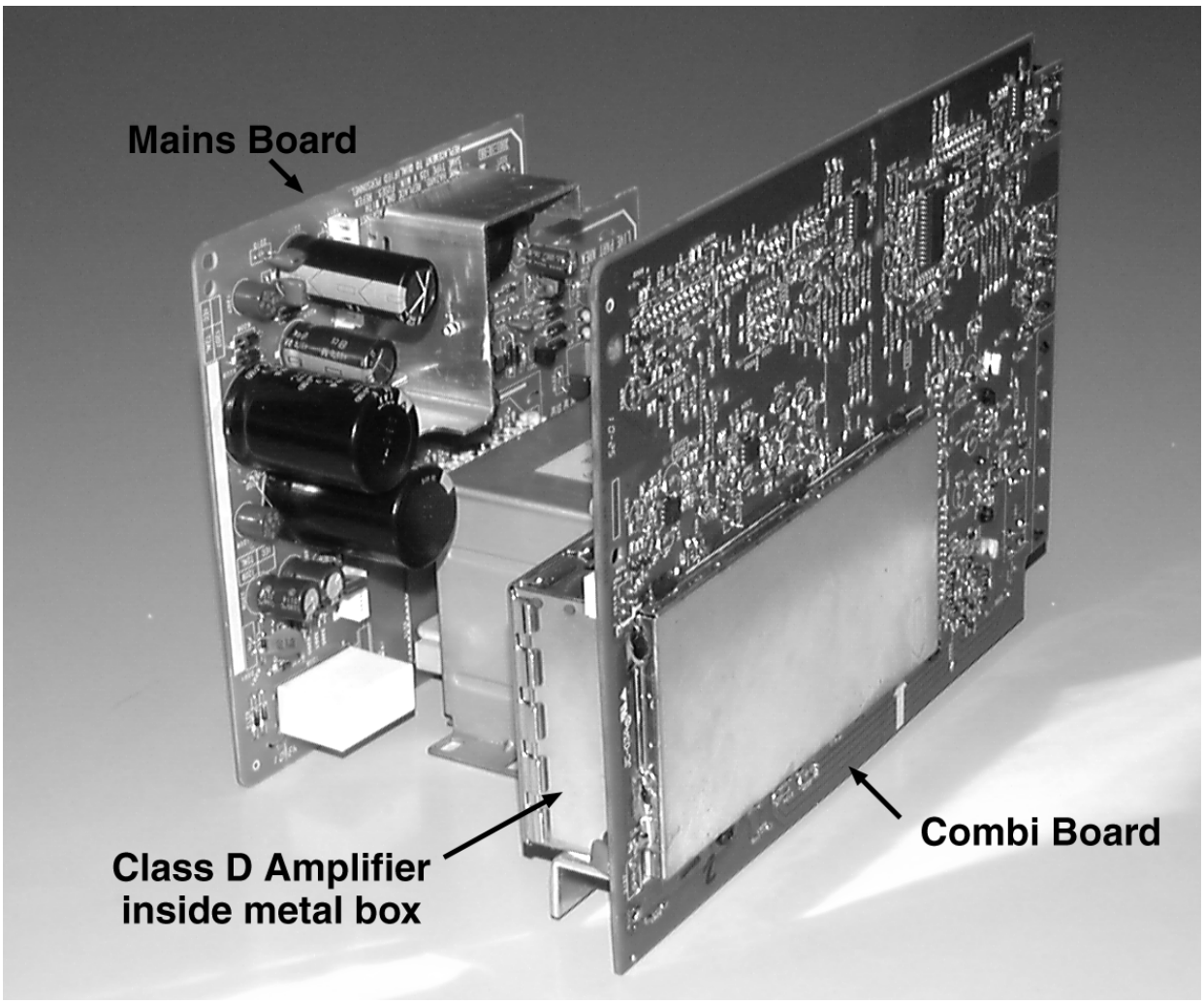

Power 2002 Module

(70W Class D)

stage M.4/C.7

TABLE OF CONTENTS

Brief Circuit Description 11-2
Service Hints 11-4

COMBI BOARD
Circuit Diagram
Overview 11-7
Source Selector part 11-8
Audio Frequency & Logic part.....11-9
Oscillator & Pre-Amplifier part.....11-10
Amplifier part Left Channel 11-11
Amplifier part Right Channel 11-12

Component Layout
Copperside view 11-13
Componentside view.....11-14

MAINS BOARD
Component Layout 11-15
Circuit Diagram 11-16

Partslist.....11-17

Class-D Circuit Description (Based on Power 2002 Module - 70W Class D)

Basically Class-D works by transforming the LF audio input to a square wave signal with a fixed frequency and a variable duty cycle. See simplified drawing below.

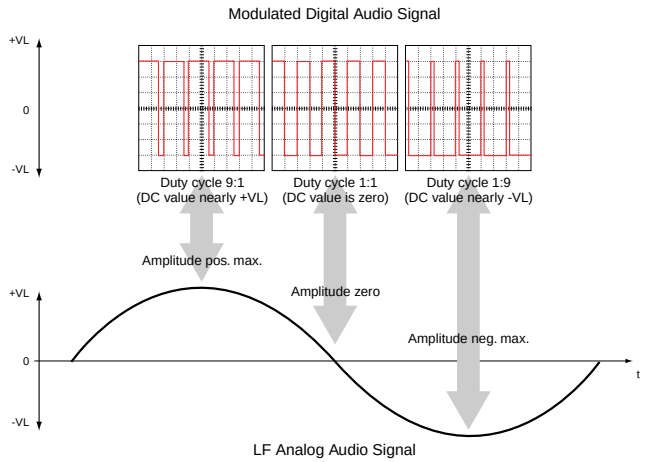

The amplitude of the square wave signal is equal to the supply voltage of the amplifier. With the audio signal the square wave signal is pulse-width modulated.

Compared to a conventional power amplifier the benefits of the Class D amplifier are:

- higher effiency
- lower power dissipation
- smaller cooling fin
- smaller mains transformer

Disadvantage of this concept is:

- 500kHz square wave signal with high current requires a shielding box to suppress radiation.

Required Circuitries:

- **500kHz square wave oscillator**.
  The oscillator frequency is created by 7312-C; it is a dual-frequency oscillator with ceramic resonators 5300 and 5302, which resonate at 500kHz and 425kHz respectively. The resonators are switched by transistors 7309 and 7316, controlled by the "OZ_SW" line from the port expander 7406.
  The reason for 2 frequencies is to avoid tuner disturbances in the AM-band.
  The oscillator signal is shaped to square wave with 7312-B, afterwards buffered and fed to the amplifier modulators (ROZ to the right channel, LOZ to the left). One channel gets inverted clock to balance supply loading.

- **Modulator**
  The modulator forms the pulse width modulated signal. For each channel a seperate modulation is required.

- **Power FETs**
  The FETs require drivers which supply the gates. One for the high-side-FET and one for the low-side-FET. Because of the different supply voltages also an additional level shifter is necessary per driver.

- **Output filter**
  The output filter is necessary to block the 500kHz square wave signal from the speaker.
  It consists of a series-mode coil 5101 and a capacity of approx. 500nF (2116, 2134), which forms a Chebycheff filter with 40kHz cut-off frequency at 6Ω load. For EMC reasons both, the speaker output and the return ground are fed through a common mode coil 5102, the filter is further improved by splitting the output capacity into 2116 before and 2134 after the common mode coil.

Blockdiagram Class D

All above mentioned circuitries are located inside the metal shielding box.

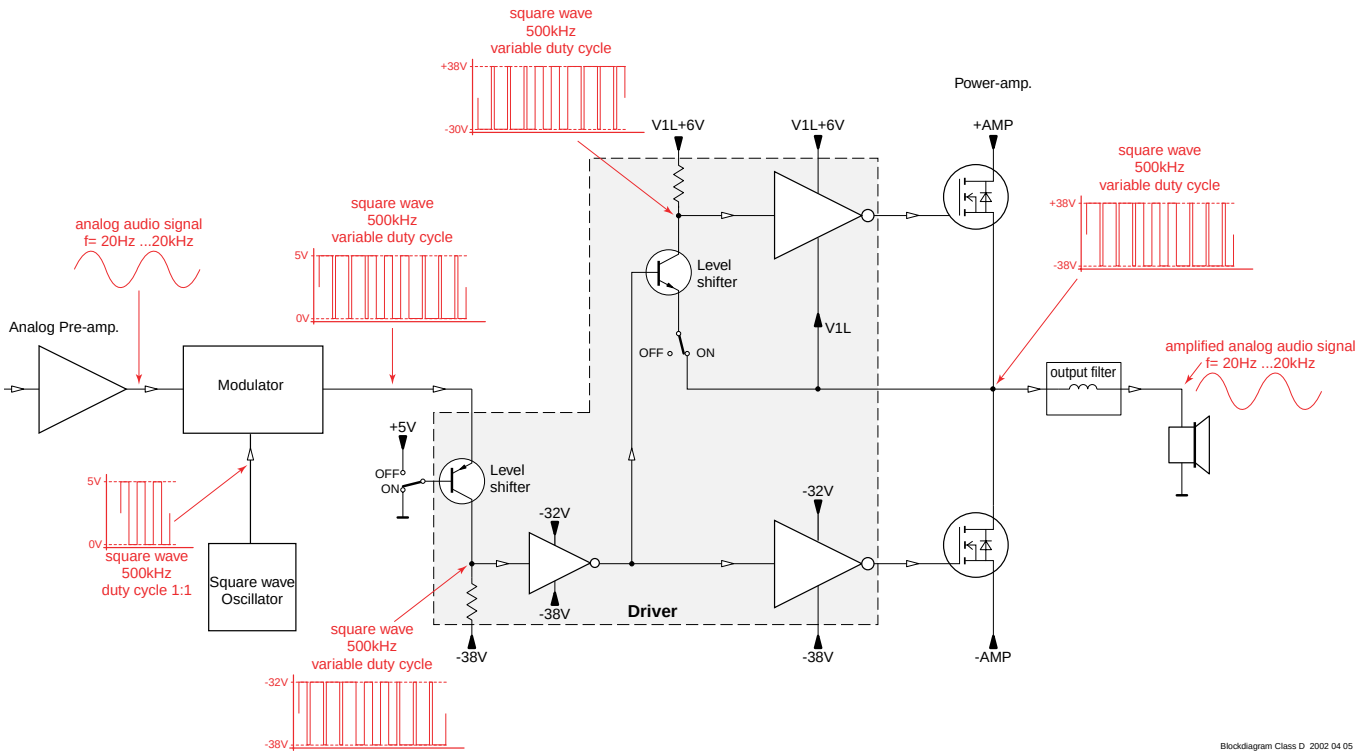

Class-D Circuit Description (Based on Power 2002 Module - 70W Class D)

Functional Description:

Refers to the left channel in schematic diagrams.
The first stage of the modulator is an error integrator which compares the input to the (20 dB amplified) output signal of the power stage. The difference is leading to a current, which loads the integrator 7122-A. The second stage (7122-B) is again integrating, thus creating high gain at low frequency, which leads to high feedback and low distortion. The next stage is a comparator, which compares the integrated voltage to a triangle wave - thus creating a voltage controlled duty cycle. The comparator is realized by cascaded gates.
At pin 12 of IC7122 there is a square wave with the same frequency and duty cycle as the desired output.

The next task is to feed this information to the output FETs. Both FETs are n-channel types, so they are modulated by feeding the gate in respect to the source connection. We use inverters 74LV14 as drivers. The driver for the low-side FET (7121) is supplied by the negative supply -VL and a voltage +VL generated by 7115, which is 6.3V higher than -VL. The digital signal is level-shifted by 7128 to the negative supply reference. 3142, 6111 and 2126 together is a delay circuit for rising edges by approx. 50ns, this is to compensate the switch-off delay of the FETs and ensures that both FETs are not conducting at the same time.
The high-side FET (7109) is controlled by the inverted signal taken from pin 2 of 7118-A, which is level-shifted by transistor 7119. The driver for the high-side FET is supplied by a floating voltage between the amplifier output -V1L and +V1L, created by the charge pump 6107, 2114 regulated by 7114 to a 6.3V higher level. The pump is supplied by +5.6V to ensure supply at start-up (no signal). The necessary delay for the rising edge is generated by the level-shifter (mainly the pull-up 3117) and the input capacity of the driver (pin 13 of 7105-F).
The last stage in the gate driver consists of three gates in parallel for increased output current for the capacitive load, afterwards comes a 22R series resistor for soft rising edges and a transistor for very fast falling edges. This combination gives the best compromise of efficiency and radiation.

Protection Circuits:

The amplifier is protected against low load impedance (including short circuit). Current is sensed by shunts 3101, 3130 in both supplies. Overcurrent at the positive supply is then sensed by 7104, the negative supply overcurrent triggers 7117, which then also triggers 7104. The collector current then triggers the monoflop 7122-D and -E, giving a high pulse at pin 8. This shuts off level-shifter 7128 and triggers transistor 7129, which draws current into the emitter resistors (3134, 3127) of level-shifter 7119, which is therefore also shut off. So both FETs are shut off for approx. 0.2 sec, afterwards the amplifier tries to work again, but if the overload continues the on-time is only a few cycles.

The shut-off mechanism is also used to shut off the amplifier during headphone usage; this is done by pulling pin 11 of 7122-E high. The line "AMP_OFF" is controlled by the port expander 7406.

The loudspeakers are protected against DC voltages resulting e.g. from defective FETs, voltages greater than +-2V are detected by 7110+7112 and pull down the "DC_PROT" line, which disables the speaker relay 1201.

The gain of the class-D amplifier is 20dB, adjusted by the feedback resistors 3136, 3149 and the input resistors 3139, 3340. The input reference voltage for 7122-A is approx. half the supply, therefore 3144, 3148 are used for offset compensation. This compensation can be fine-tuned by the potentiometer 3306 to reach <1mV DC output.

Service Hints

The analog part of the Combi Board can be repaired without opening the metal shielding box. In case of a 'Class D' problem it is advised to disassemble the board first, desolder the metal bottom of the shielding box and assemble the board again. This takes a few minutes only.

Attention: Poor soldering of the metal shielding box results in disturbance of the tuner.

In most cases the FETs 7109 and/or 7121 for the left channel, respectively 7218 and/or 7231 for the right channel will be defective. This can be checked easily with an ordinary Ohm-meter.

LEFT CHANNEL:
In case **7109** is defect replace following parts:
7109, 7111, 7105, 7119, 7104 and 3101

In case **7121** is defect replace following parts:
7121, 7113, 7118, 7117 and 3130

RIGHT CHANNEL:
In case **7218** is defect replace following parts:
7218, 7221, 7209, 7228, 7208 and 3205

In case **7231** is defect replace following parts:
7231, 7210, 7235, 7227 and 3243

If none of the FETs is defective the fault is most probably located in the modulator. To check the operation - follow the given signals.

General description of Oscilloscope setup:

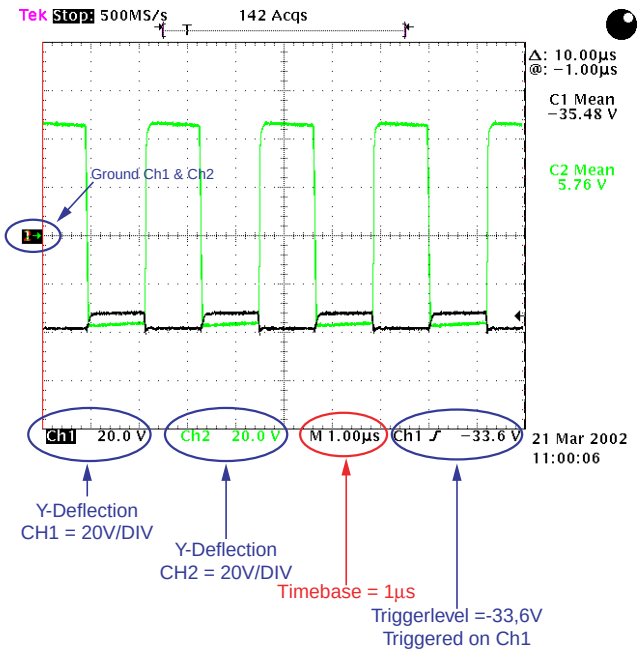

The following signals are measured at:
AUX in = 500mV/1kHz, Volume = -28dB

Measuringpoint Ⓐ: Output pre-amplifier

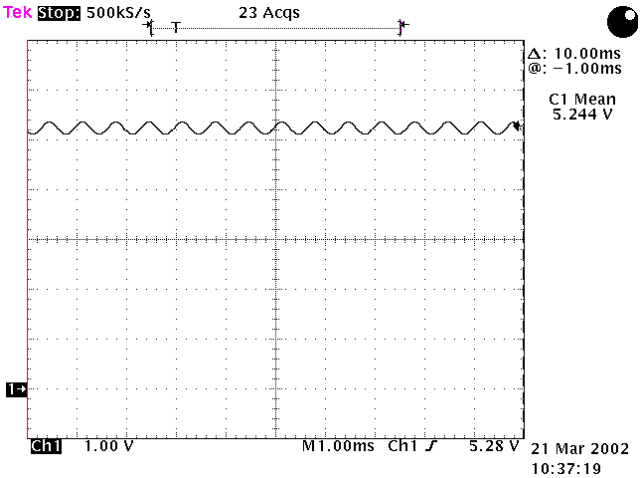

Normal analog signal measured (1kHz- Timebase 1µs). If this signal can´t be measured - the fault is outside the shielding box.

Measuringpoint Ⓑ: Input Modulator

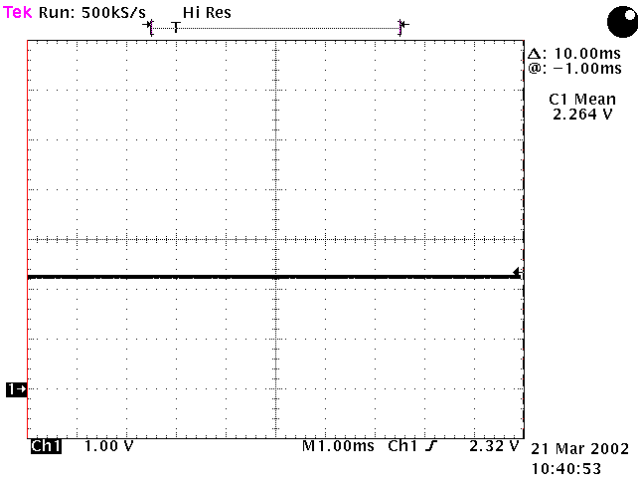

The 1kHz signal not visible anymore. Reducing the timebase to 1µs shows the oscillogram below.

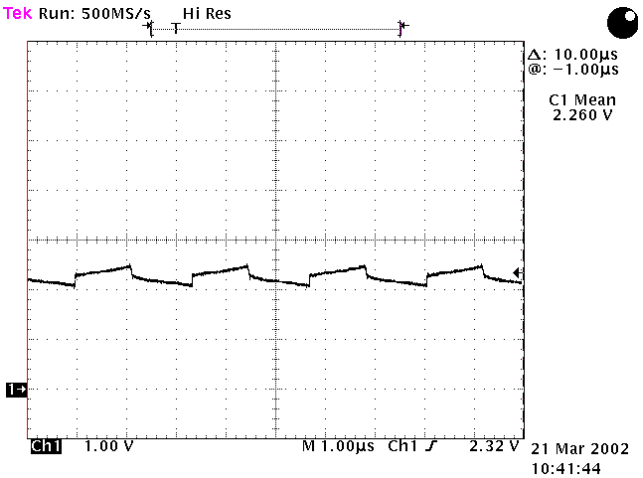

Service Hints

Measuringpoint Ⓒ:

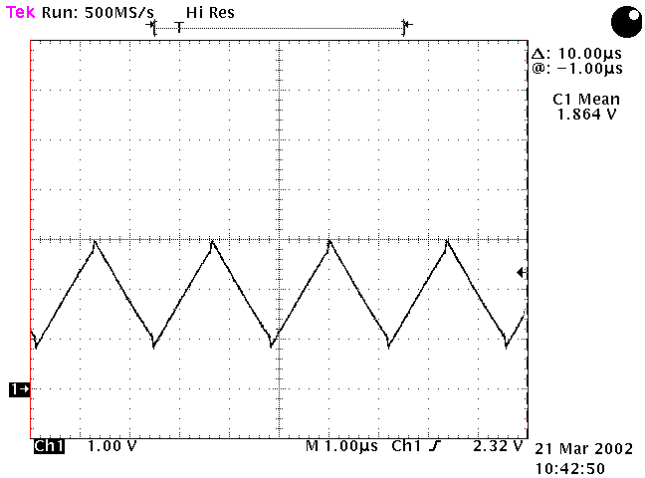

The first stage of the modulator is an integrator. An integrated rectangle results in a triangle.

Measuringpoint Ⓓ:

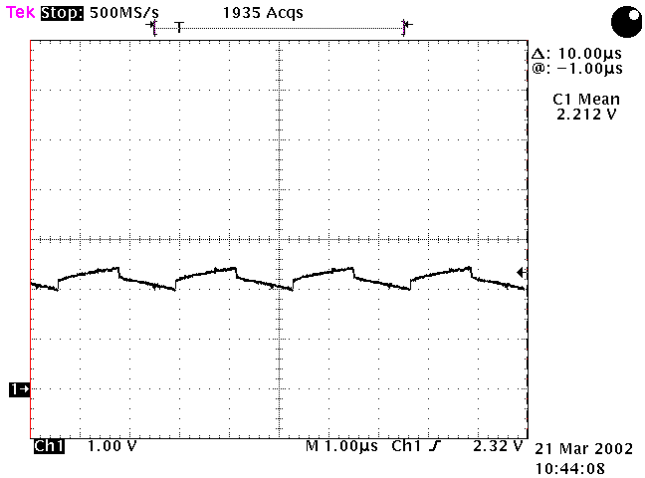

The oscillator signal (squarewave) is fed to the second integrator (7122-B).

Measuringpoint Ⓔ:

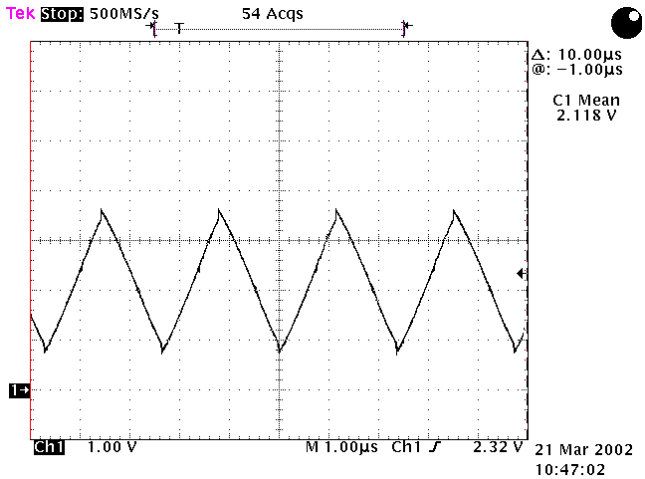

The integrated rectangle results in a triangle. 7122-C and 7122-F work as a comparator.

Measuringpoint Ⓕ: Output modulator

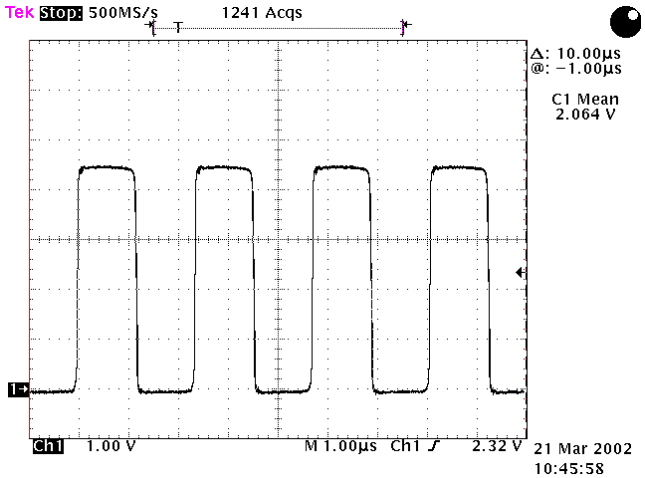

In this pulse width modulated square wave the analog Audio signal is included. Measurements with an analog scope will show a jitter on the falling edge.

The modulator frequency is still fixed to 500kHz. Similar to a frequency modulation - in this case the amplitude of the analog audio signal varies the pulse width, the frequency defines the speed.

Measuringpoint Ⓖ:

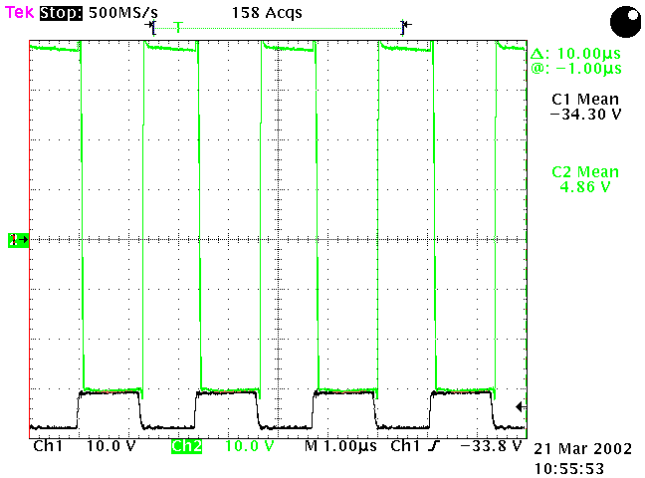

The low-side driver signal (Ch1) is the modulator output level-shifted by transistor 7128. The high-side driver signal (Ch2) is the inverted low-side driver signal level-shifted by transistor 7119.

Service Hints

Measuringpoint Ⓗ: gate-signal of the FETs

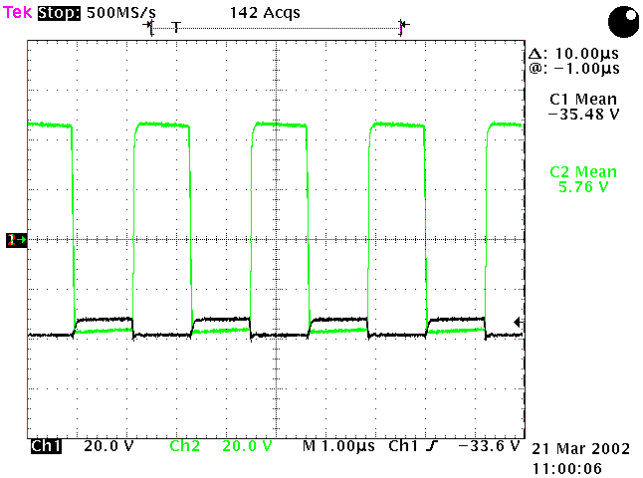

Measuringpoint Ⓘ:

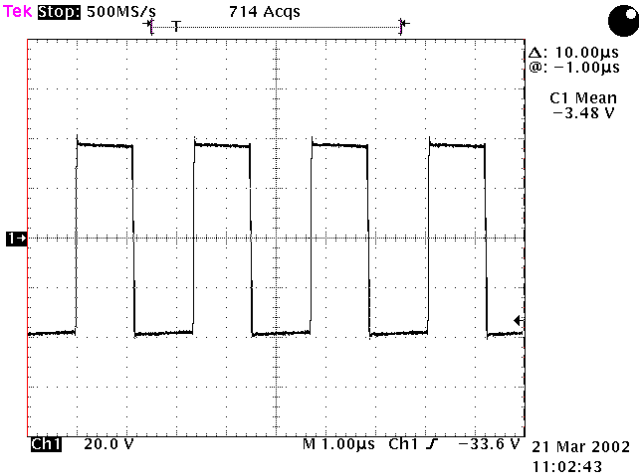

Digital output signal.

Measuringpoint Ⓙ:

The following three signals are measured after output filter 5101 with different timebases.

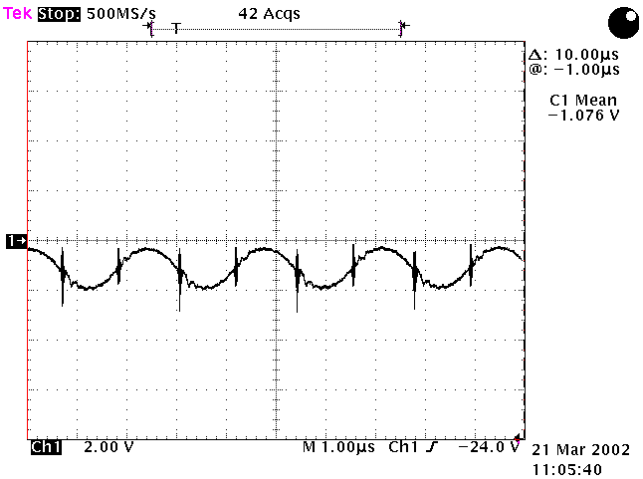

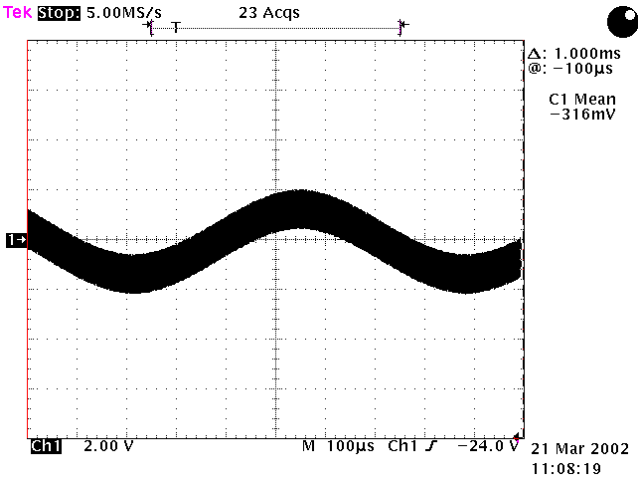

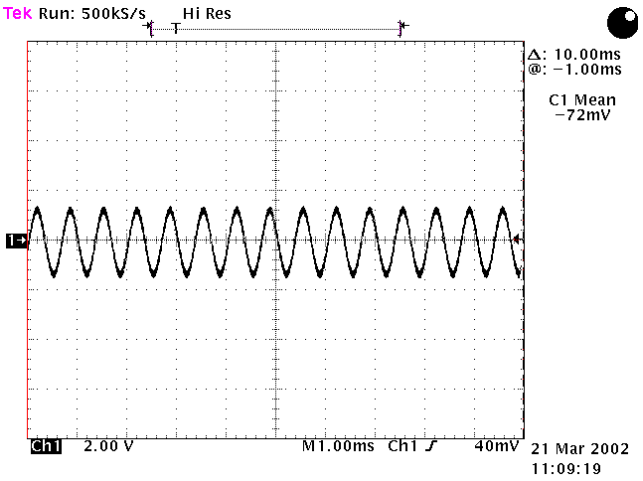

Measuringpoint Ⓚ:

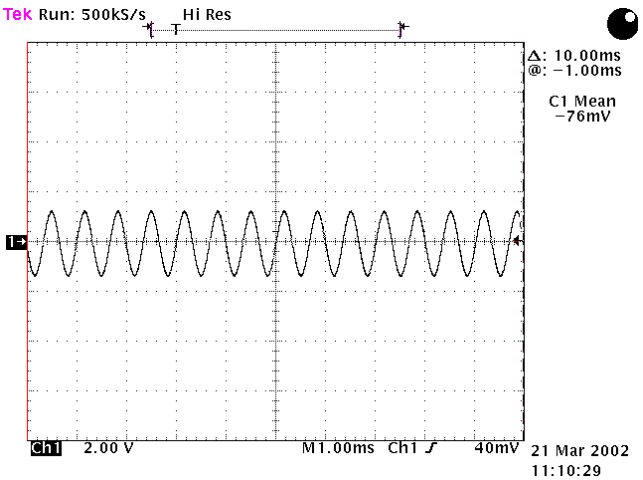

After common mode coil 5102 - the audio signal is restored.

11-7

Power 2002 70W Class D
Combi Board Circuit Diagram Overview

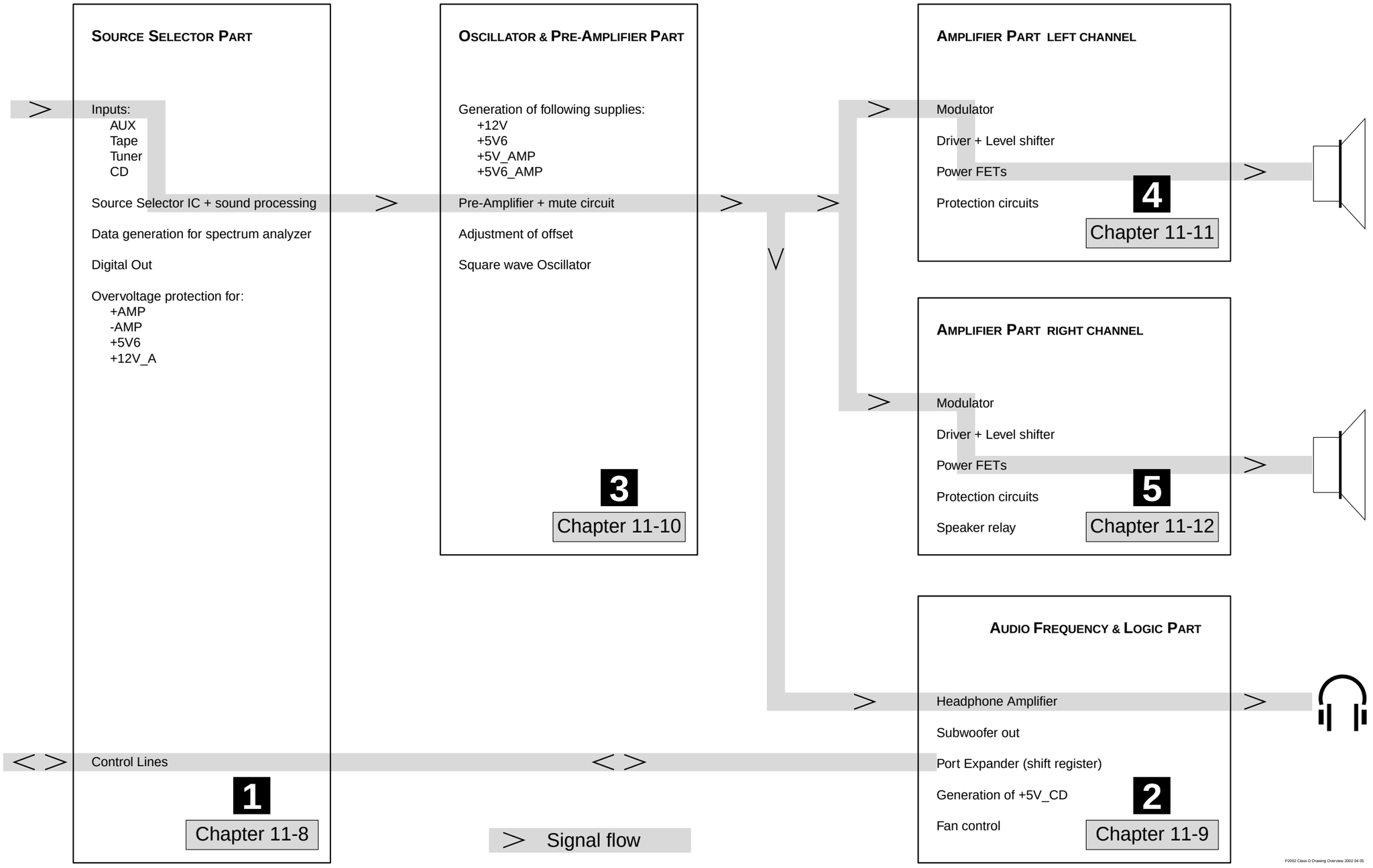

11-8

1005 A1
1006 A15
1010 B15
1011 C15
1012 G15
1013 D1
1018 F1
1020 A15
1022 B1
1026 D15
1311 C1
2500 A3
2519 A1
2520 A2
2526 A13
2527 A14
2528 A3
2529 A12
2531 A2
2532 A13
2533 B13
2534 B3
2535 B3
2536 B9
2537 B3
2538 B13
2539 C11
2540 C3
2541 D6
2542 D7
2543 D8
2546 D8
2548 D10
2549 D10
2550 D8
2551 D9
2552 E8
2553 E3
2554 E2
2555 E6
2556 E3
2557 F3
2558 F11
2559 F3
2560 G4
2561 G4
2562 G5
2563 G5
2564 G5
2565 G5
2566 G6
2567 G6
2568 G12
2569 G8
2570 G10
2571 G11
2572 H9
2573 H10
2574 H9
2575 H9
2576 H7
2577 H8
2578 H7
2581 E13
2582 D12
3500 A2
3504 A3
3506 E12
3507 F12
3514 A3
3515 A13
3517 A14
3518 A2
3519 A3
3520 A3
3521 A11
3522 A2
3523 B2
3524 B9
3525 B3
3526 B10
3527 B3
3528 B11
3529 B9
3530 B13
3531 B9
3532 B10
3533 C2
3534 C5
3535 C8
3536 D8
3539 D8
3540 D7
3543 D9
3544 D10
3545 E3
3549 E6
3550 E3
3551 E10
3552 F6
3553 F6
3554 F6
3555 F13
3556 F13
3557 F6
3558 F13
3559 F14
3560 F6
3561 G12
3562 G13
3563 G6
3564 G6
3566 G11
3567 G12
3568 G6
3569 G12
3570 G13
3571 G8
3572 G10
3573 G11
3574 H6
3575 H8
3576 H7
3577 H8
3578 H9
3579 H10
4501 D13
5500 A13
6500 C3
6501 C5
6502 F14
6503 G13
6504 G13
6505 G12
6506 F12
6507 F12
6508 D13
6510 E13
7500-A A12
7500-B B12
7500-C B12
7500-D C12
7500-E B11
7500-F A11
7505 B10
7506 E12
7507 E7
7508 G14
7509 E13
8301 F14

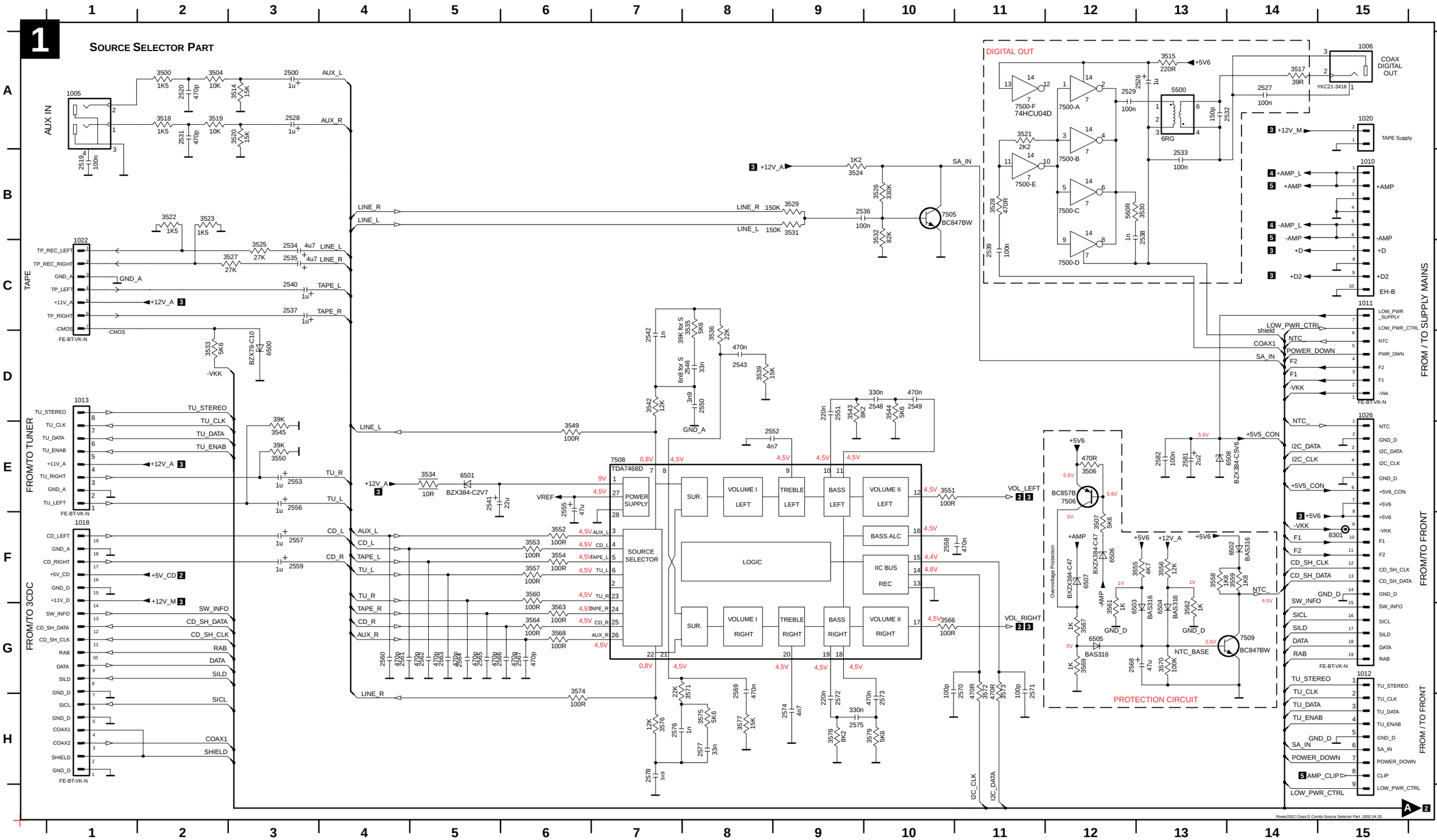

11-9

1004 E1 2400 B3 2404 C3 2408 D1 2412 E4 2416 D8 2420 H5 3402 C5 3406 C4 3410 D5 3415 E3 3421 F3 3425 G4 3429 G5 3433 G4 3437 H8 6400 D8 7400-B C3 7405 F4 7409 G9 9268 G8
1014 G1 2401 C3 2405 C4 2409 D3 2413 E1 2417 F4 2421 H14 3403 C2 3407 D2 3411 D7 3418 E2 3422 F4 3426 G4 3430 G5 3434 G10 3438 H10 6401 G14 7402 D8 7406 F12 7410 G4
1400 D13 2402 B5 2406 D1 2410 D5 2414 F2 2418 H2 3400 B3 3404 C2 3408 D2 3412 D8 3419 F3 3423 F5 3427 G11 3431 G9 3435 H14 3439 H5 6402 H8 7403 F3 7407 G2 7411 H8
1401 E9 2403 C1 2407 D3 2411 E3 2415 E8 2419 H2 3401 C3 3405 C4 3409 D2 3413 D3 3420 F3 3424 G2 3428 G11 3432 G3 3436 H5 3440 H7 6402 G14 7400-A D3 7404 F2 7408 G3 7411 H12 8302 E12

2 AUDIO FREQUENCY & LOGIC PART

HEADPHONE AMPLIFIER

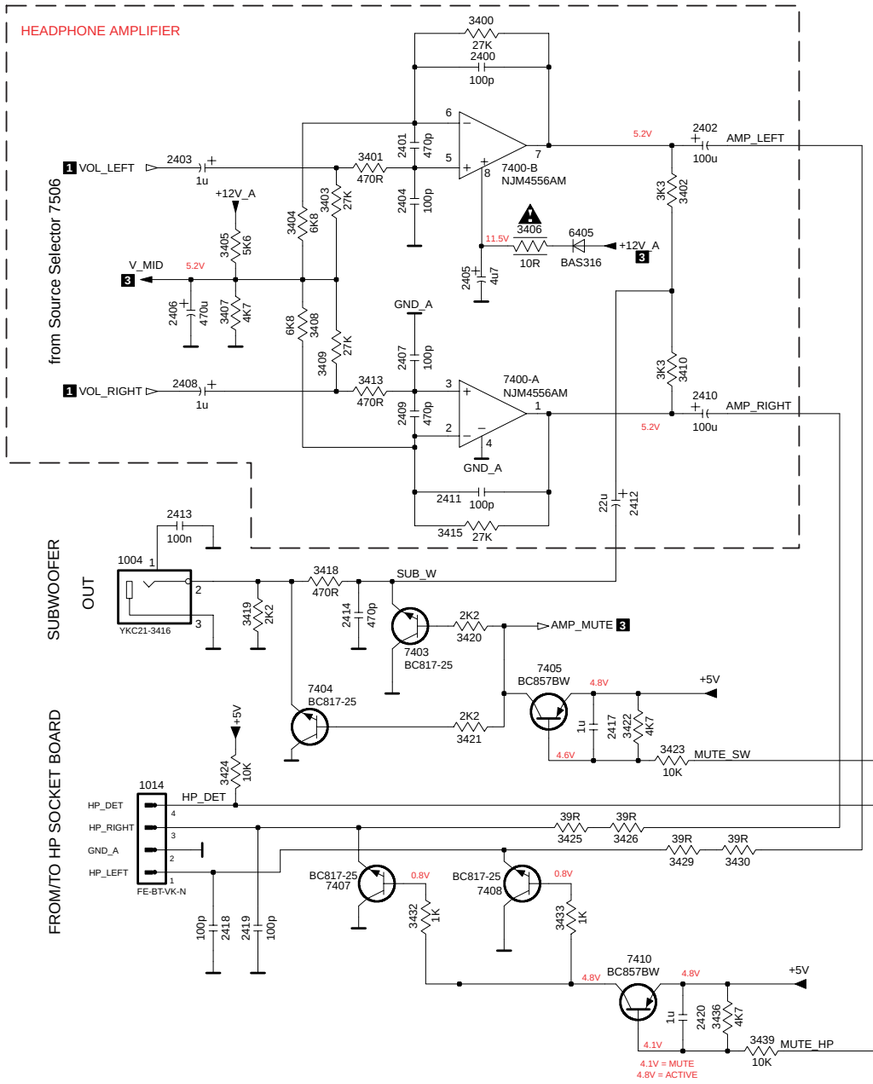

FAN CONTROL for Layout stage .6

Fan runs always. Higher volume increase the speed.

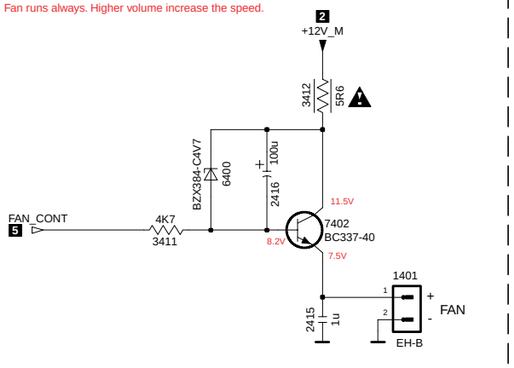

FAN CONTROL for Layout stage .7

Fan runs not at low volumes.
Higher volume starts the fan.
The fan-speed depends on the output power.

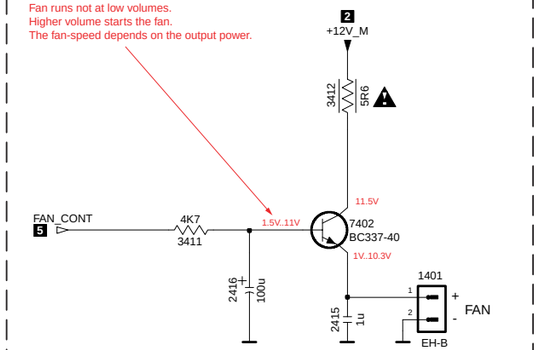

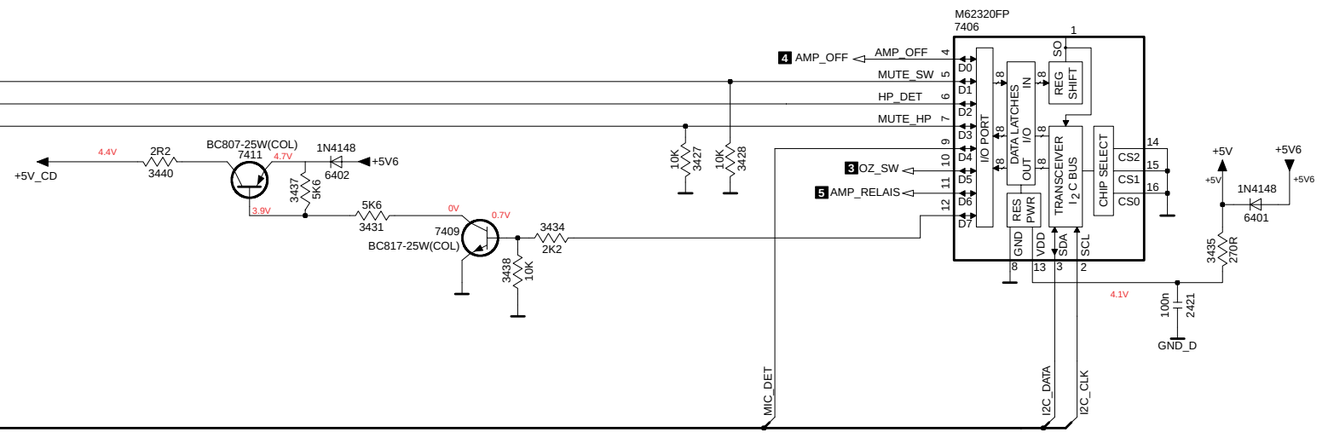

11-10

3 SUPPLY, OSCILLATOR & PRE-AMPLIFIER PART

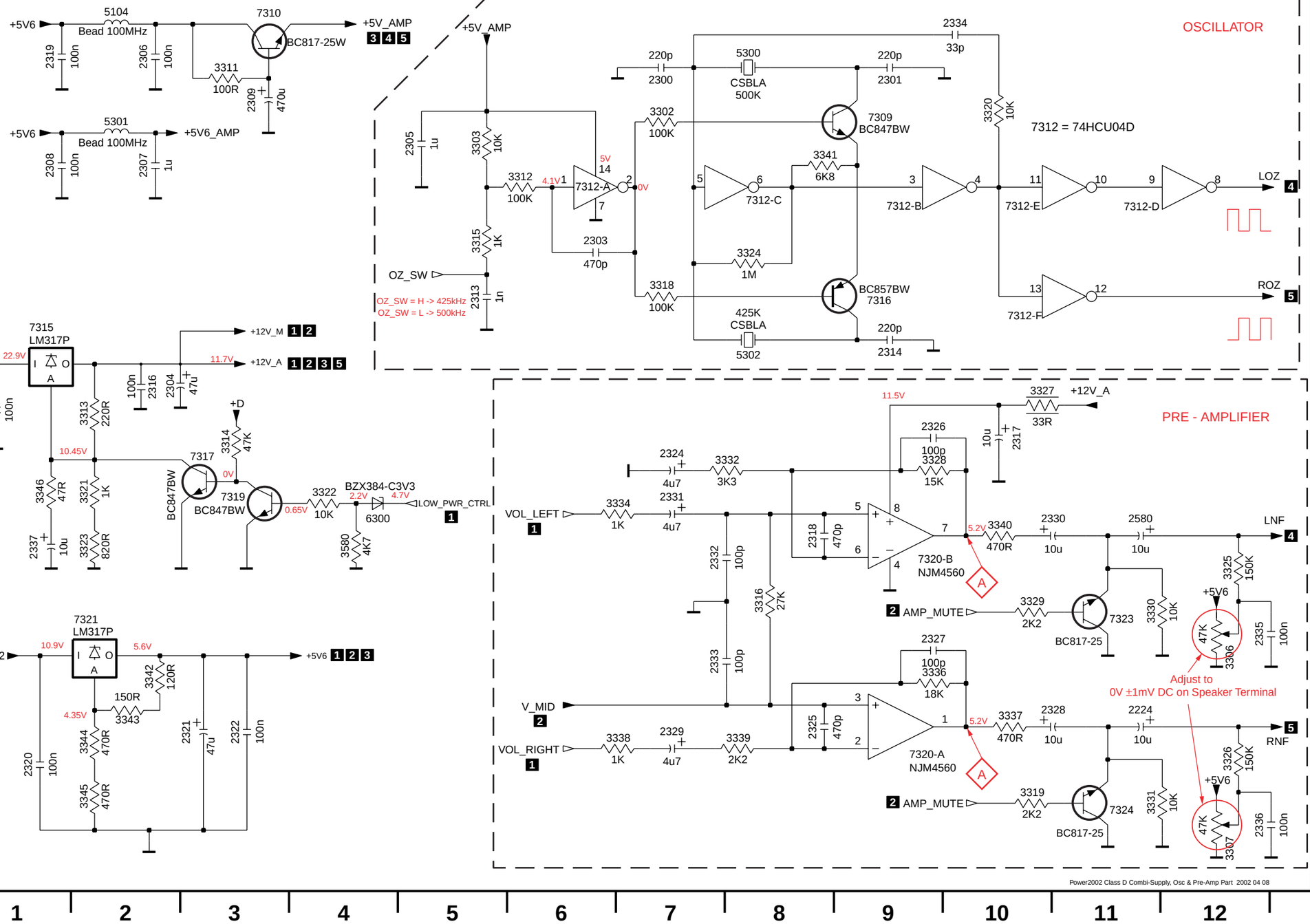

◇ for wave forms see chapter 11-4 Service Hints

Attention:
Adjustment to 0V ±1mV has to be done with ‘cold’ set.
After operating a few minutes the value may increase up to 30mV.

2224 G11
2300 A7
2301 A9
2303 B6
2304 D3
2305 B5
2306 A2
2307 B2
2308 B1
2309 B3
2312 E1
2313 C6
2314 D9
2316 D2
2317 E10
2318 F8
2319 A1
2320 H1
2321 G3
2322 G3
2324 E7
2325 G8
2326 E9
2327 F9
2328 G11
2329 G7
2330 E11
2331 E7
2332 F7
2333 G7
2334 A10
2335 F12
2336 H12
2337 F1
2580 E11
3302 B7
3303 B5
3306 G12
3307 H12
3311 A3
3312 B6
3313 D2
3314 E3
3315 C5
3316 F8
3318 C7
3319 H10
3320 B10
3321 E2
3322 E4
3323 F2
3324 C8
3325 F12
3326 G12
3327 D10
3328 E9
3329 F10
3330 F11
3331 H11
3332 E8
3334 E7
3336 G9
3337 G10
3338 G7
3339 G8
3340 E10
3341 B8
3342 G2
3343 G2
3344 G2
3345 H2
3346 E1
3347 G6
3580 F4
4301 A5
5104 A2
5300 A8
5301 B2
5302 D8
6300 E4
7309 B9
7310 A3
7312-A C6
7312-B C9
7312-C B8
7312-D C11
7312-E C10
7312-F D10
7315 D1
7316 C9
7317 E3
7319 E3
7320-A G9
7320-B F9
7321 F2
7323 F11
7324 H11
9284 H4
9288 G4

11-11

2100 A10 2101 A11 2102 A10 2103 A9 2104 A2 2106 B11 2108 A5 2109 C13 2110 D8 2111 C3 2112 D10 2114 D9 2115 E13 2116 E12 2117 E13 2118 F10 2119 F2 2120 E1 2122 C10 2124 F10 2125 E1 2126 F7 2128 G10 2130 G10 2132 C4 2134 E13 2135 F3 2136 F10 2137 G12 3100 A2 3101 B10 3102 C2 3103 B10 3106 B11 3107 D7 3108 A2 3109 B9 3110 B5 3112 C13 3113 C13 3114 B5 3115 E5 3116 C12 3117 B6 3119 D9 3120 C3 3121 C3 3122 C4 3123 D9 3125 F3 3126 A1 3127 C2 3128 E13 3129 F10 3130 F10 3133 D7 3134 D6 3135 E11 3139 E2 3140 E3 3141 C10 3142 F7 3143 E5 3144 F2 3146 F5 3147 B1 3148 F2 3149 G2 5100 A10 5101 D12 5102 D12 5103 G10 5105 A2 6104 C12 6106 D8 6107 D9 6108 D4 6109 E6 6111 F7 7104 B11 7105-A C8 7105-B C8 7105-C B8 7105-D B8 7105-E B7 7105-F B6 7109 B10 7110 C13 7111 C9 7112 C12 7113 F9 7114 C8 7115 C4 7117 F11 7118-A F5 7118-B F6 7118-C F7 7118-D E8 7118-E F8 7118-F F8 7119 D7 7121 E10 7122-A E2 7122-B E3 7122-C E3 7122-D A4 7122-E A5 7122-F E4 7128 E5 7129 B2 7130 A3 7131 C2 8300 G13

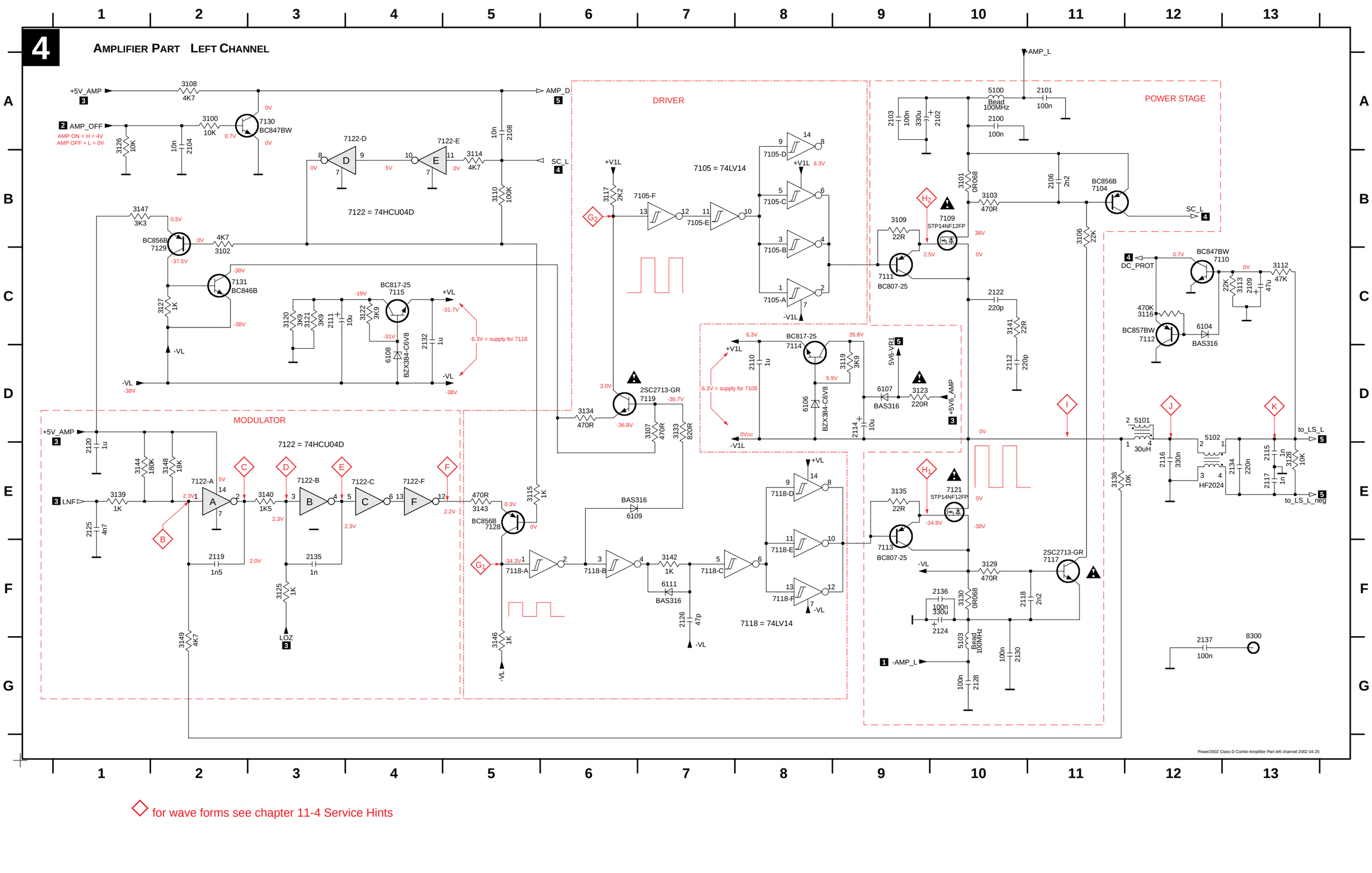

◇ for wave forms see chapter 11-4 Service Hints

11-12

1201 F14	2203 B9	2211 D3	2217 D10	2225 G9	2237 F3	3210 A5	3218 B3	3226 D12	3238 E13	3247 E9	3255 F5	3263 G13	6202 B13	6211 D9	7203 B13	7209-E B6	7221 C9	7232-A F2	7235-A G5	7238 C2
1307-A E14	2205 B14	2212 D10	2218 G9	2226 F2	3201 B14	3211 F6	3219 C13	3227 B2	3239 D10	3248 E11	3256 G5	5200 A11	6204 D13	6212 D8	7208 B11	7209-F A8	7222 D8	7232-B F3	7235-B G6	7239 B2
1307-B F14	2206 B10	2213 G10	2219 E13	2227 G7	3203 B14	3211 F6	3221 C2	3228 D9	3241 F10	3251 F2	3258 G2	5201 E12	6205 D14	6213 D4	7209-A C8	7209-B B8	7223 C4	7232-C F4	7235-C F7	7240 F5
2200 A10	2208 A5	2214 E9	2220 G10	2229 H10	3205 B10	3215 C5	3223 C13	3229 D13	3243 G10	3252 F3	3259 G2	5202 E12	6206 D13	6214 E7	7209-B B8	7209-C B8	7227 F11	7232-D B3	7235-D E8	7243 G14
2201 B10	2209 D12	2215 E13	2221 F2	2234 E13	3207 B13	3216 C11	3224 D12	3230 D3	3245 E7	3253 F7	3261 E7	5203 G10	6207 D14	6216 F14	7209-C B8	7209-D B7	7228 E7	7232-E B4	7235-E F8	
2202 A11	2210 D8	2216 E12	2222 E1	2236 D5	3209 B10	3217 B5	3225 B6	3232 D4	3246 E6	3254 G2	3262 G14	5205 D11	6209 D12	6217 F7	7209-D B7	7220 C13	7231 E10	7232-F F4	7235-F F8	

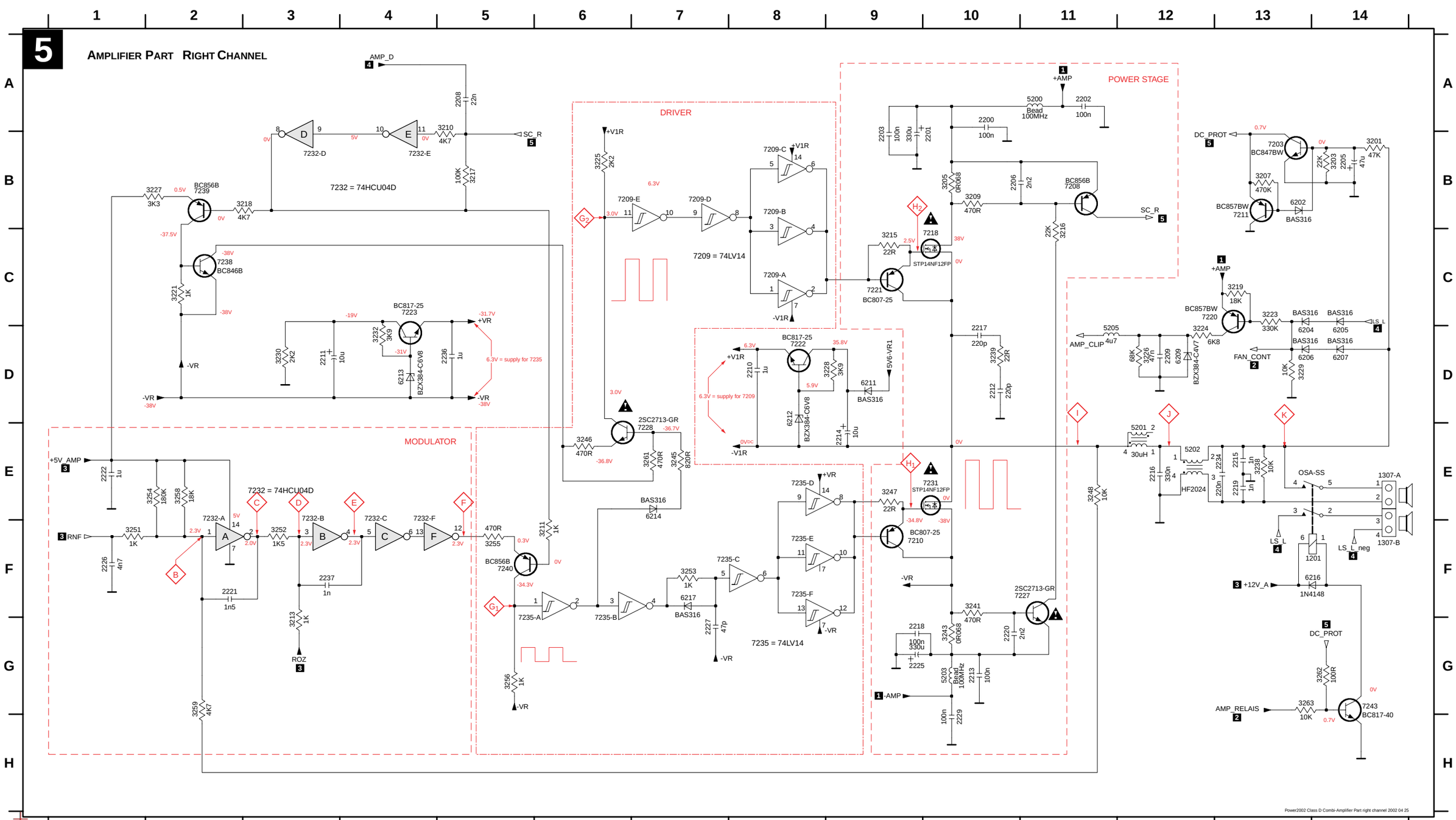

◇ for wave forms see chapter 11-4 Service Hints

11-13

Combi Board copperside view

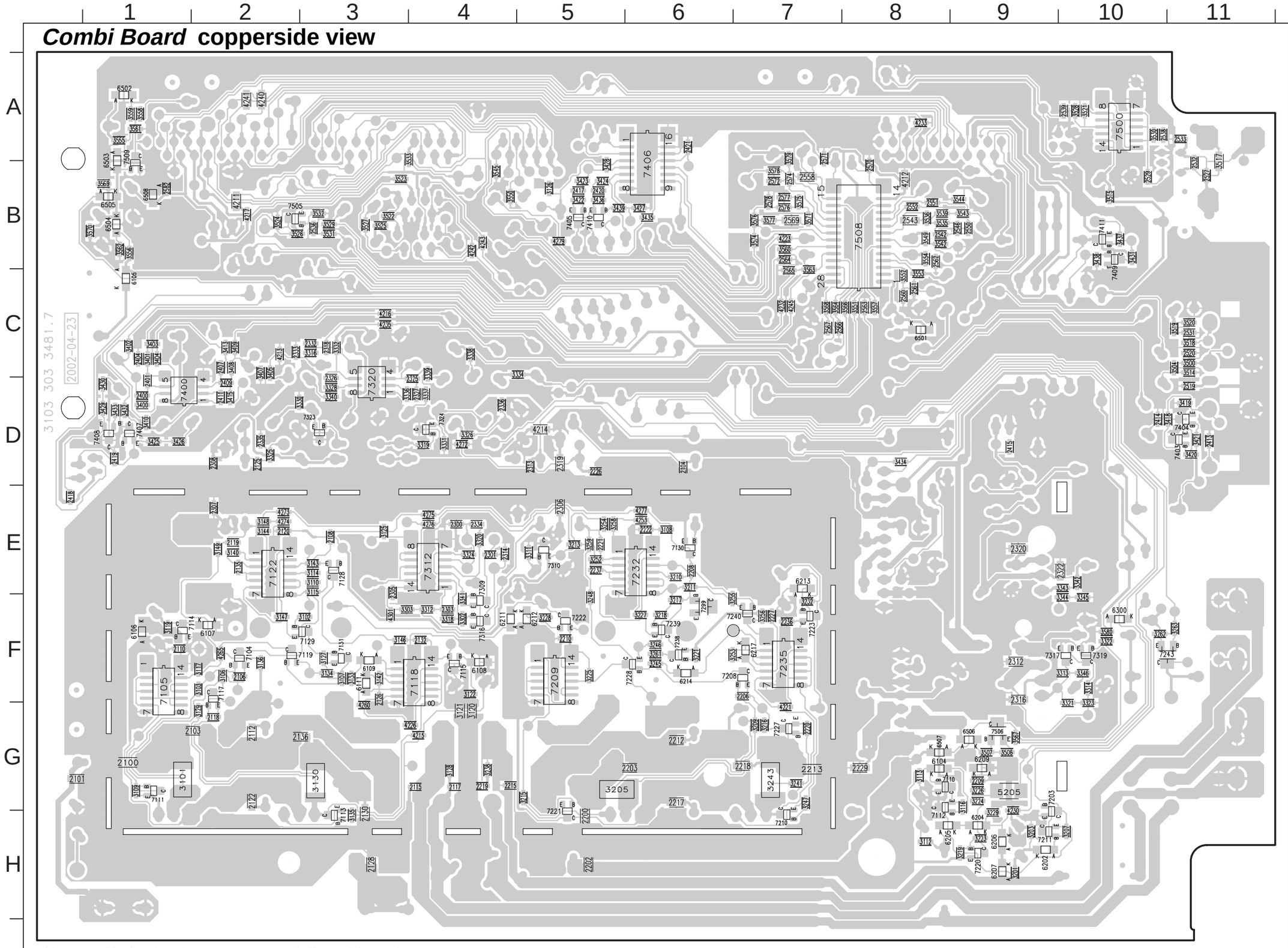

This assembly drawing shows a summary of all possible versions.
For components used in a specific version see schematic diagram respectively partslist.

2100 G1
2101 G1
2103 G2
2104 D6
2106 F2
2108 E3
2110 F1
2112 G2
2115 G4
2117 G4
2118 G2
2119 E2
2120 E2
2122 G2
2125 D2
2126 F3
2128 H3
2130 H3
2132 F4
2135 E2
2136 G3
2200 H5
2202 H5
2203 G6
2206 F7
2208 E6
2209 G9
2210 F5
2212 G6
2213 G7
2215 G4
2217 G6
2218 G7
2219 G4
2220 G7
2221 E5
2222 E6
2226 D5
2227 F7
2229 G8
2236 F7
2237 E5
2300 E4
2301 E4
2303 F4
2306 E5
2307 E2
2308 D2
2312 F9
2313 E5
2314 E4
2316 F9
2318 C3
2319 D5
2320 E9
2322 E10
2325 D4
2326 D3
2327 D4
2332 C3
2333 C2
2334 E4
2335 D2
2336 D4
2400 D1
2401 D1
2404 C1
2407 C2
2409 D2
2411 D2
2413 D11
2414 D10
2415 D9
2417 B5
2418 E1
2419 D1
2420 B5
2421 A6
2519 D11
2520 C11
2527 B11
2529 B10
2531 C11
2532 B11
2533 A11
2536 B3
2538 A10
2539 A10
2542 B8
2543 B8
2546 B9
2550 B9
2551 B8
2552 B8
2558 B7
2560 C8
2561 C8
2562 B8
2563 C8
2564 B7
2565 C7
2566 C7
2567 C7
2569 B7
2570 B8
2571 A7
2572 B7
2574 B7
2576 B7
2577 B7
2582 B1
3101 G1
3102 F3
3103 F2
3106 E2
3107 F3
3108 E6
3109 G1
3110 E3
3112 H8
3113 G8
3114 E3
3115 E3
3116 G9
3117 F2
3119 F1
3120 G4
3121 G4
3122 F4
3125 E3
3126 B5
3127 F3
3128 G4
3129 G2
3130 G3
3133 F3
3134 F3
3135 H3
3136 F2
3140 E2
3142 F3
3143 E3
3144 E2
3146 F3
3147 F2
3148 E2
3149 E2
3201 H9
3203 H9
3205 G5
3207 H10
3209 G7
3210 E6
3211 E6
3213 E5
3215 G5
3216 G7
3217 F6
3218 F6
3219 H9
3221 F6
3223 H9
3224 G9
3225 F5
3226 G9
3227 F6
3228 F5
3229 H9
3232 F7
3238 G4
3241 G7
3243 G7
3245 F6
3246 F6
3247 G7
3248 F5
3252 E5
3253 E5
3254 E5
3255 F6
3256 F7
3258 E5
3259 E6
3261 F6
3262 F10
3263 F11
3302 F4
3303 F3
3311 D4
3312 F4
3313 F10
3314 F10
3316 C3
3319 D4
3320 E4
3321 G10
3322 F10
3323 G10
3324 E4
3325 D2
3326 D4
3328 D3
3330 D2
3331 D4
3332 C3
3334 C5
3336 D3
3337 D4
3338 C4
3339 C4
3340 D3
3341 F4
3342 E10
3343 E10
3344 E10
3345 F10
3346 F10
3400 D1
3401 C1
3402 C1
3403 C1
3404 C1
3405 C2
3407 C2
3408 C2
3409 C1
3410 D1
3413 C2
3415 D2
3418 D11
3419 D11
3420 D11
3421 D11
3422 B5
3423 B5
3424 B5
3425 B5
3426 D1
3427 B6
3428 B5
3429 D1
3430 D1
3431 B10
3432 D1
3433 D1
3434 D8
3435 B6
3436 B5
3437 B10
3438 B10
3439 B5
3500 C11
3504 C11
3506 G9
3507 G9
3514 C11
3515 B10
3517 C1
3519 C11
3520 C11
3521 A10
3522 B3
3523 B3
3524 B3
3525 B3
3526 B2
3527 B3
3528 A10
3529 B3
3530 A10
3531 B3
3532 B3
3533 B4
3535 B8
3536 B8
3539 B8
3542 B8
3543 B8
3544 B8
3545 B4
3549 B8
3550 B4
3551 C8
3552 C8
3553 C8
3554 B8
3555 A1
3556 B1
3557 C8
3558 A1
3559 A1
3560 B7
3561 A1
3562 B1
3563 C7
3564 C7
3566 C8
3567 G9
3568 C7
3569 B1
3570 B1
3571 B7
3574 B7
3575 B7
3576 B7
3577 B7
3578 B7
3579 A7
3580 E10
4211 B2
4212 B8
4213 C2
4214 D5
4215 G4
4216 C3
4217 B2
4221 G7
4223 B7
4226 G4
4230 H9
4232 C7
4233 A8
4235 C3
4240 A2
4241 A2
4242 B4
4243 B4
4245 C7
4253 E6
4260 G3
4265 F2
4271 D4
4273 E2
4274 E2
4275 E4
4276 E4
4277 E6
4279 B5
4301 F3
4714 D5
5205 G9
6104 G8
6105 C1
6106 F1
6107 F2
6108 F4
6109 F3
6111 F3
6201 H9
6204 H9
6205 H8
6206 H9
6207 H9
6209 G9
6211 F4
6212 F5
6213 E7
6214 F6
6217 F7
6300 E10
6501 C8
6502 A1
6503 B1
6504 B1
6505 B1
6506 G9
6507 G8
6508 B1
7104 F2
7105 F1
7110 G8
7111 G1
7112 H8
7113 H3
7114 F1
7115 F4
7117 F2
7118 F4
7119 F3
7122 E2
7128 E3
7129 E6
7130 E6
7131 F3
7203 G9
7208 F6
7209 F5
7210 H7
7211 H9
7220 H9
7221 H5
7222 F5
7223 F7
7227 G7
7228 F6
7232 E6
7235 F10
7238 F6
7239 E6
7240 F7
7243 F10
7299 C7
7300 E10
7309 C7
7310 G9
7312 G8
7317 B1
7319 F10
7320 D3
7321 D3
7324 D4
7400 D1
7403 D11
7404 D11
7405 B6
7406 D1
7407 B10
7408 D1
7410 B5
7411 B10
7500 A10
7505 B2
7506 G9
7508 B8
7509 A1

11-14

Combi Board componentside view

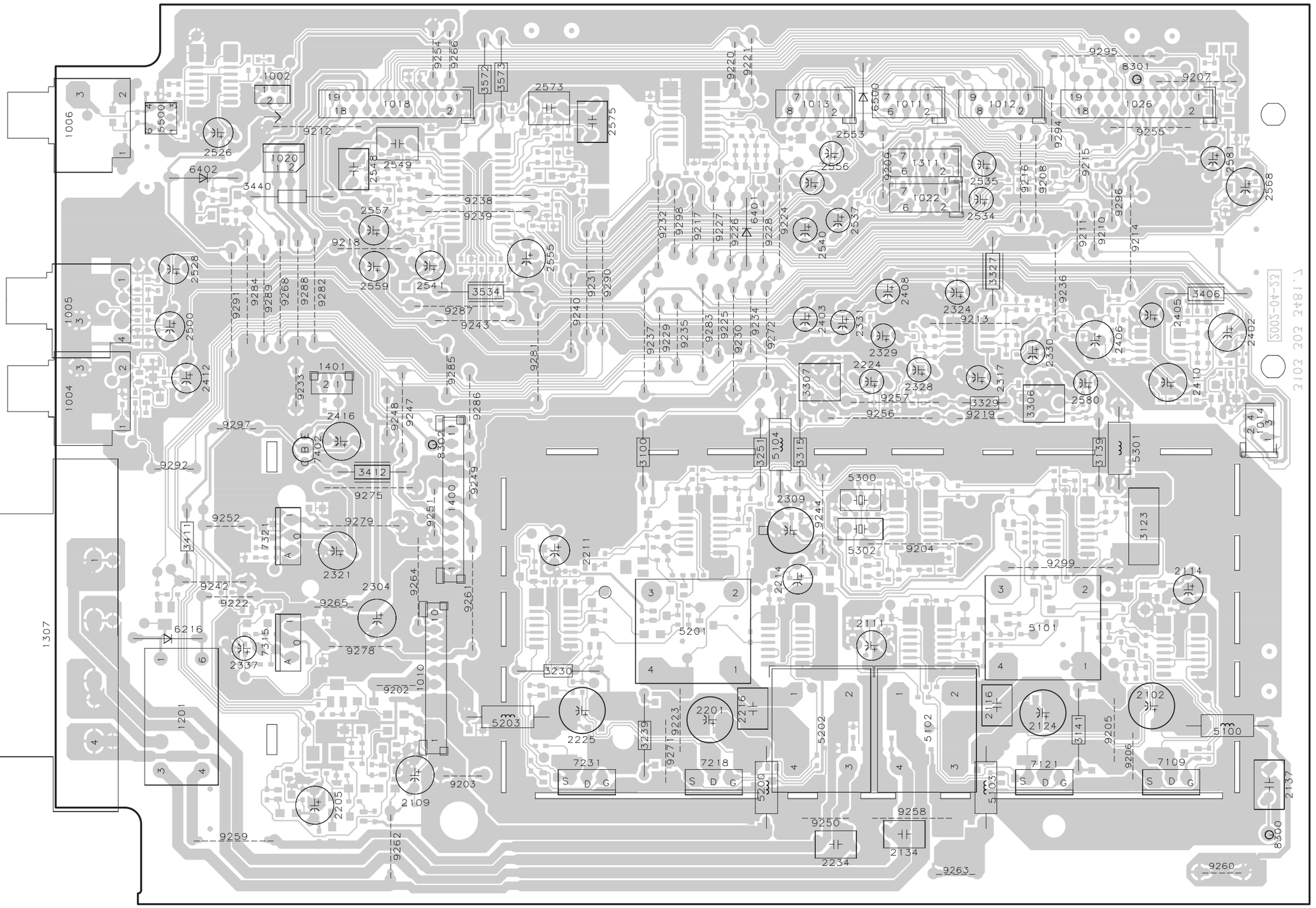

This assembly drawing shows a summary of all possible versions.
For components used in a specific version see schematic diagram respectively partslist.

1002 A3
1004 D1
1005 C1
1006 B1
1010 G4
1011 A8
1012 A9
1013 A7
1014 D11
1018 A4
1020 B3
1022 B8
1026 A10
1201 G2
1307 F1
1311 B8
1400 E4
1401 D3
2102 G10
2109 H4
2111 F8
2114 F11
2116 G9
2124 G9
2134 H8
2137 H11
2201 G6
2205 H3
2211 E5
2214 F7
2216 G7
2224 D8
2225 G5
2234 H8
2304 H8
2309 E7
2317 D9
2321 F3
2324 C9
2328 D8
2329 D8
2330 D10
2331 C8
2337 G2
2402 C11
2403 C7
2405 C11
2406 D10
2408 C8
2410 D11
2412 D2
2416 D3
2500 C2
2526 B2
2528 B2
2534 B9
2535 B9
2537 B8
2540 C7
2541 C4
2548 B3
2549 B4
2553 B8
2555 C5
2556 B8
2557 B3
2559 C3
2568 B11
2573 A5
2575 B6
2580 D10
2581 B11
3100 E6
3123 E10
3139 E10
3141 G10
3230 G5
3239 G6
3251 E7
3306 D9
3307 D7
3315 E7
3327 C9
3329 D9
3406 C11
3411 E2
3412 E3
3440 B2
3534 C4
3572 A4
3573 A5
5100 G11
5101 F9
5102 G8
5103 H9
5104 E7
5200 H7
5201 F6
5202 G7
5203 G5
5300 E8
5301 E10
5302 E8
5500 B1
6216 F2
6401 B7
6402 B2
6500 A8
7109 G11
7121 G10
7218 G6
7231 G5
7315 F2
7321 E2
7402 E3
8300 H11
8301 A10
8302 E4
9202 G4
9203 H4
9204 H8
9205 G10
9206 G10
9207 A11
9208 B9
9209 B8
9210 C10
9211 C10
9212 B3
9213 C9
9214 C10
9215 B10
9216 B9
9217 C6
9218 C3
9219 D9
9220 A7
9221 A7
9222 F2
9223 G6
9224 B7
9225 C7
9226 C7
9227 C7
9228 C7
9229 D6
9230 D7
9231 C5
9232 C6
9233 D3
9234 C7
9235 D6
9236 C10
9237 D6
9238 B4
9239 B4
9240 C5
9242 F2
9243 C4
9244 E7
9247 D4
9248 D4
9249 E4
9250 H8
9251 E4
9252 E2
9254 A4
9255 B10
9256 D8
9257 D8
9258 H8
9259 H2
9260 H11
9261 F4
9262 H4
9263 H9
9264 F4
9265 F3
9266 A4
9268 C3
9271 G6
9272 D7
9275 E3
9278 F3
9279 F3
9281 D5
9282 C3
9283 C6
9284 C2
9285 B4
9286 C4
9287 C3
9288 C6
9289 C2
9290 C6
9291 C2
9292 E2
9294 B10
9295 A10
9296 B10
9297 D2
9298 B6
9299 F10

11-15

Mains Board copperside view

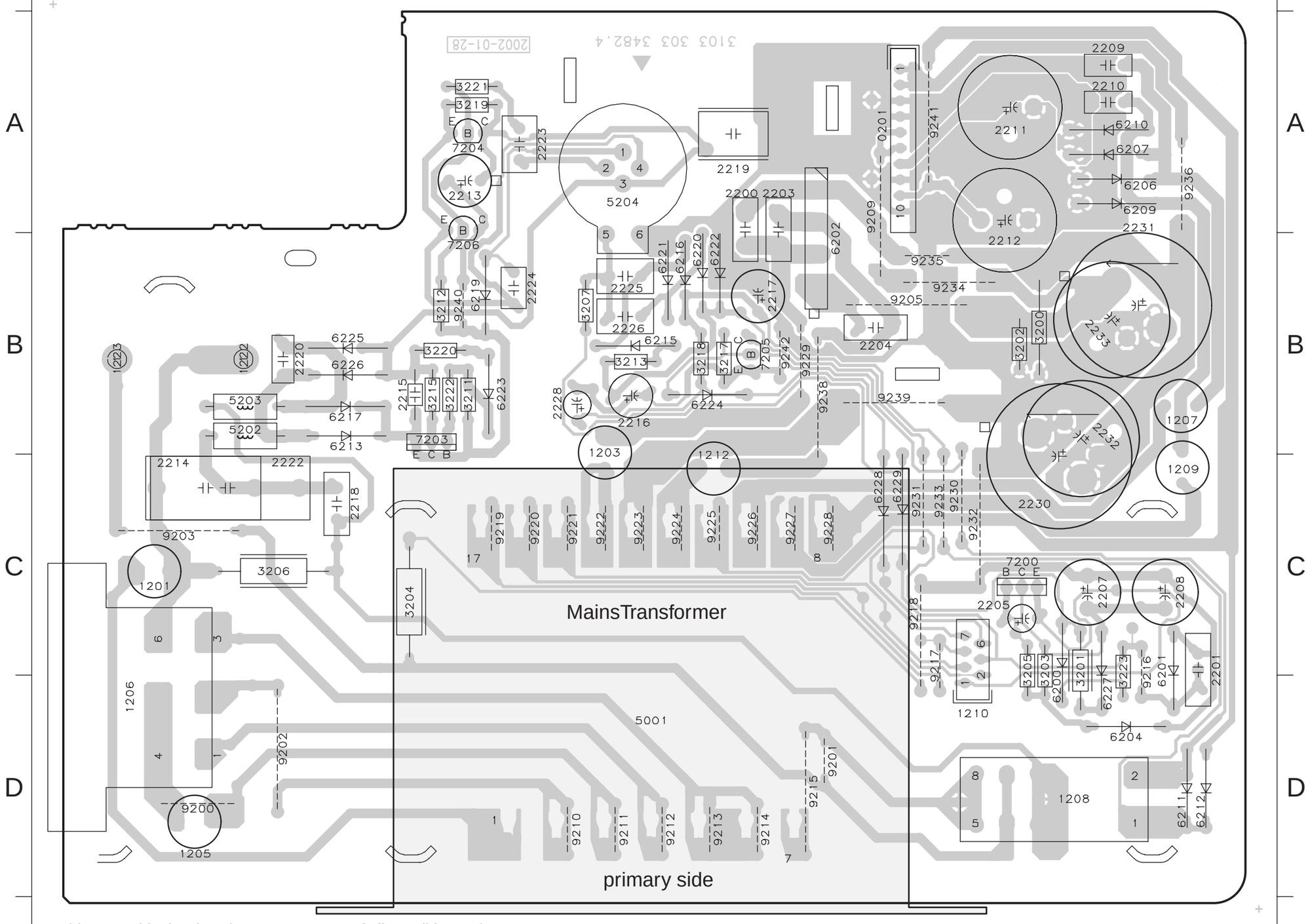

This assembly drawing shows a summary of all possible versions.
For components used in a specific version see schematic diagram respectively partslist.

Power2002 70W Class D - Mains Board stage.4 2002 03 27

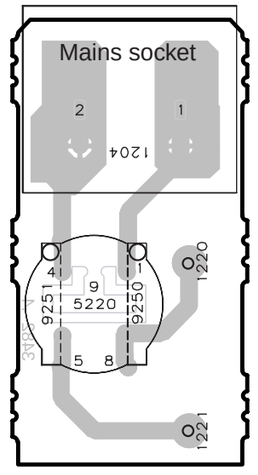

0201 A4
1201 C1
1203 B3
1205 D1
1206 D1
1207 B5
1208 D5
1209 C5
1210 C5
1212 C4
1222 B1
1223 B1
2200 A4
2201 D5
2203 A4
2204 B4
2205 C5
2207 C5
2208 C5
2209 A5
2210 A5
2211 A5
2212 A4
2213 A2
2214 B1
2215 B2
2216 B3
2217 B4
2218 C2
2219 A4
2220 B1
2222 C1
2223 A3
2224 B3
2225 B3
2226 B3
2228 B3
2230 C5
2231 B5
2232 B5
2233 B5
3200 B5
3201 D5
3202 B5
3203 D5
3204 C2
3205 D5
3206 C1
3207 B3
3211 B2
3212 B2
3213 B3
3215 B2
3217 B4
3218 B3
3219 A3
3220 B2
3221 A2
3222 B2
3223 C5
5001 C3
5202 B1
5203 B1
5204 A3
6200 D5
6201 D5
6202 B4
6204 D5
6206 A5
6207 A5
6209 A5
6210 A5
6211 D5
6212 D5
6213 B2
6215 B3
6216 B3
6217 B2
6219 B2
6220 A3
6221 B3
6222 A3
6223 B2
6224 B3
6225 B2
6226 B2
6227 C5
6228 C4
6229 C4
7200 C5
7203 C2
7204 A2
7205 B4
7206 A2
9200 D1
9201 A4
9202 D1
9203 C1
9205 B4
9209 A4
9210 D3
9211 D3
9212 D3
9213 D3
9214 D3
9215 D4
9216 C5
9217 C4
9218 C4
9219 C2
9220 C3
9221 C3
9222 C3
9223 C3
9224 C3
9225 C4
9226 C4
9227 C4
9228 C4
9229 B4
9230 C5
9231 C4
9232 C5
9233 C5
9234 B5
9235 B4
9236 A5
9238 B4
9239 B4
9240 B2
9241 A4
9242 B4

11-16

0201 D10	1207 B5	1222 A2	2204 A6	2210 C7	2215 D5	2220 E1	2226 D7	2233 A7	3204 A2	3212 D5	3219 E6	5001 A4	6201 C9	6209 C6	6215 D8	6221 E8	6226 E2	7203 D3	9201 B3
1201 A3	1208 C3	1223 A2	2205 A10	2211 C7	2216 E8	2222 D1	2228 C1	3200 A8	3205 B9	3213 D8	3220 E4	5202 E1	6202 A6	6210 C7	6216 D9	6222 E8	6227 B8	7204 E5	
1203 A5	1209 C5	2200 A6	2207 B8	2212 C6	2217 E9	2223 D6	2230 A7	3201 B8	3206 B2	3215 E3	3221 D6	5203 E1	6204 B9	6211 C3	6217 D2	6223 E3	6228 C1	7205 B2	
1205 A3	1210 C10	2201 C8	2208 B9	2213 D4	2218 E1	2224 E6	2231 B7	3202 A8	3207 C8	3217 C2	3222 E3	5204 D7	6206 C6	6212 C3	6219 D6	6224 C1	6229 C8	7206 D5	
1206 A3	1212 B5	2203 A6	2209 C6	2214 D1	2219 E7	2225 C8	2232 A7	3203 B9	3211 D4	3218 B1	3223 B8	6200 B8	6207 C7	6213 D2	6220 D8	6225 E2	7200 A9	9200 A3	

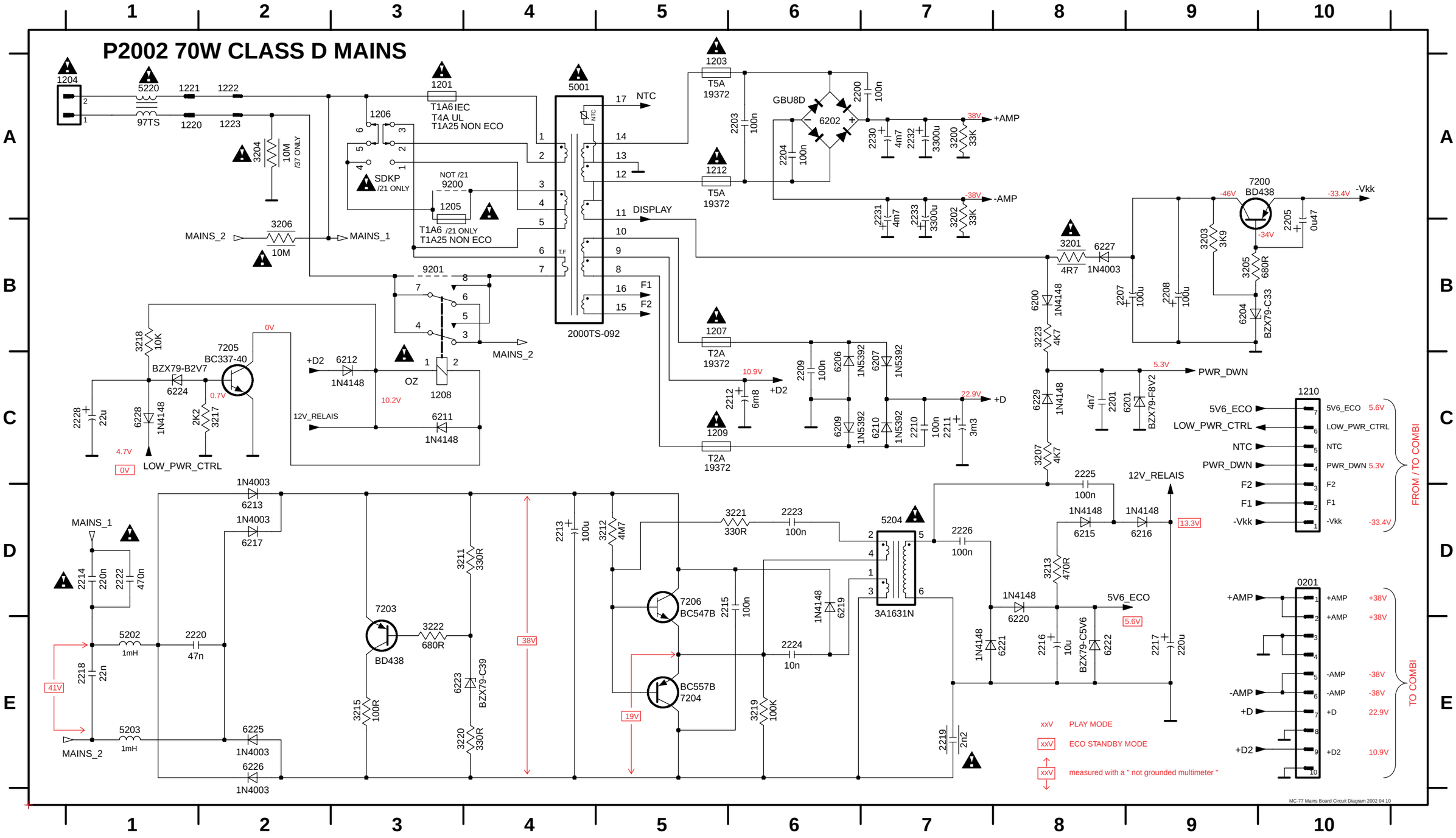

ELECTRICAL PARTSLIST POWER 2002 70W Class-D Combi Board

MISCELLANEOUS

1004	4822 267 31729	CINCH SOCKET, 1 POLE
1005	4822 265 20553	CINCH SOCKET, 2 POLE
1006	4822 267 31729	CINCH SOCKET, 1 POLE
1011	4822 267 10953	FFC-CONNECTOR, 7P, TOP ENTRY
1012	2422 025 14518	FFC-CONNECTOR, 9P, TOP ENTRY
1013	4822 265 11515	FFC-CONNECTOR, 8P, TOP ENTRY
1014	4822 267 10733	FFC-CONNECTOR, 4P
1018	4822 265 11553	FFC-CONNECTOR, 19P
1022	4822 267 10953	FFC-CONNECTOR, 7P, TOP ENTRY
1026	4822 265 11553	FFC-CONNECTOR, 19P
1201	2422 132 07517	RELAY 2P 12V
1307	4822 267 31176	SPEAKER TERMINAL

CAPACITORS

2100 ©	4822 122 33496	100nF	10%	63V
2101 ©	2222 580 15649	100nF	10%	50V
2102	2020 012 93762	330µF	20%	50V
2103 ©	4822 126 14585	100nF	10%	50V
2104 ©	5322 126 11583	10nF	10%	63V
2106 ©	2238 786 11554	2,2nF	5%	16V
2108 ©	5322 126 11583	10nF	10%	63V
2109	4822 124 81286	47µF	20%	16V
2110 ©	3198 017 41050	1µF	20%	10V
2111	4822 124 40248	10µF	20%	63V
2112 ©	4822 122 33575	220pF	5%	50V
2114	4822 124 40248	10µF	20%	63V
2115 ©	5322 126 11578	1nF	10%	63V
2116	5322 121 42661	330nF	5%	63V
2117 ©	5322 126 11578	1nF	10%	63V
2118 ©	2238 786 11554	2,2nF	5%	16V
2119 ©	4822 126 14247	1,5nF	10%	50V
2120 ©	3198 017 41050	1µF	20%	10V
2122 ©	4822 122 33575	220pF	5%	50V
2124	2020 012 93762	330µF	20%	50V
2125 ©	4822 126 13193	4,7nF	10%	63V
2126 ©	4822 122 33777	47pF	5%	63V
2128 ©	2222 580 15649	100nF	10%	50V
2130 ©	4822 126 14585	100nF	10%	50V
2132 ©	3198 017 41050	1µF	20%	10V
2134	4822 121 42408	220nF	5%	63V
2135 ©	3198 016 31020	1nF	5%	25V
2136 ©	4822 126 14585	100nF	10%	50V
2137	5322 121 42386	100nF	5%	63V
2200 ©	4822 126 14585	100nF	10%	50V
2201	2020 012 93762	330µF	20%	50V
2202 ©	2222 580 15649	100nF	10%	50V
2203 ©	4822 126 14585	100nF	10%	50V
2205	4822 124 81286	47µF	20%	16V
2206 ©	2238 786 11554	2,2nF	5%	16V
2208 ©	4822 126 14494	22nF	10%	25V
2209 ©	3198 024 44730	47nF	5%	50V
2210 ©	3198 017 41050	1µF	20%	10V
2211	4822 124 40248	10µF	20%	63V
2212 ©	4822 122 33575	220pF	5%	50V
2213 ©	4822 122 33496	100nF	10%	63V
2214	4822 124 40248	10µF	20%	63V
2215 ©	5322 126 11578	1nF	10%	63V
2216	5322 121 42661	330nF	5%	63V
2217 ©	4822 122 33575	220pF	5%	50V
2218 ©	4822 126 14585	100nF	10%	50V
2219 ©	5322 126 11578	1nF	10%	63V
2220 ©	2238 786 11554	2,2nF	5%	16V
2221 ©	4822 126 14247	1,5nF	10%	50V
2222 ©	3198 017 41050	1µF	20%	10V

CAPACITORS

2224	4822 124 11947	10µF	20%	16V
2225	2020 012 93762	330µF	20%	50V
2226 ©	4822 126 13193	4,7nF	10%	63V
2227 ©	4822 122 33777	47pF	5%	63V
2229 ©	2222 580 15649	100nF	10%	50V
2234	4822 121 42408	220nF	5%	63V
2236 ©	3198 017 41050	1µF	20%	10V
2237 ©	3198 016 31020	1nF	5%	25V
2300 ©	4822 126 13883	220pF	5%	50V
2301 ©	4822 126 13883	220pF	5%	50V
2303 ©	4822 126 13881	470pF	5%	50V
2304	4822 124 81286	47µF	20%	16V
2305 ©	3198 017 41050	1µF	20%	10V
2306 ©	4822 126 14585	100nF	10%	50V
2307 ©	3198 017 41050	1µF	20%	10V
2308 ©	2238 586 59812	100nF	10%	50V
2309	4822 124 80791	470µF	20%	16V
2312 ©	4822 126 14585	100nF	10%	50V
2313 ©	3198 016 31020	1nF	5%	25V
2314 ©	4822 126 13883	220pF	5%	50V
2316 ©	4822 126 14585	100nF	10%	50V
2317	4822 124 21732	10µF	20%	25V
2318 ©	4822 126 13881	470pF	5%	50V
2319 ©	4822 126 14585	100nF	10%	50V
2320 ©	4822 126 14585	100nF	10%	50V
2321	4822 124 81286	47µF	20%	16V
2322 ©	4822 126 14585	100nF	10%	50V
2324	4822 124 22726	4,7µF	20%	35V
2325 ©	4822 126 13881	470pF	5%	50V
2326 ©	2020 552 94427	100pF	5%	50V
2327 ©	2020 552 94427	100pF	5%	50V
2328	4822 124 21732	10µF	20%	25V
2329	4822 124 22726	4,7µF	20%	35V
2330	4822 124 21732	10µF	20%	25V
2331	4822 124 22726	4,7µF	20%	35V
2332 ©	2020 552 94427	100pF	5%	50V
2333 ©	2020 552 94427	100pF	5%	50V
2334 ©	2222 867 15339	33pF	5%	50V
2335 ©	2238 586 59812	100nF	10%	50V
2336 ©	2238 586 59812	100nF	10%	50V
2337	4822 124 21732	10µF	20%	25V
2400 ©	2020 552 94427	100pF	5%	50V
2401 ©	4822 126 13881	470pF	5%	50V
2402	4822 124 23052	100µF	20%	16V
2403	4822 124 22651	1µF	20%	50V
2404 ©	2020 552 94427	100pF	5%	50V
2405	4822 124 22726	4,7µF	20%	35V
2406	4822 124 80791	470µF	20%	16V
2407 ©	2020 552 94427	100pF	5%	50V
2408	4822 124 22651	1µF	20%	50V
2409 ©	4822 126 13881	470pF	5%	50V
2410	4822 124 23052	100µF	20%	16V
2411 ©	2020 552 94427	100pF	5%	50V
2412	4822 124 81151	22µF	20%	50V
2413 ©	2238 586 59812	100nF	10%	50V
2414 ©	4822 126 13881	470pF	5%	50V
2415 ©	3198 017 41050	1µF	20%	10V
2416	4822 124 23052	100µF	20%	16V
2417 ©	3198 017 41050	1µF	20%	10V
2418 ©	2020 552 94427	100pF	5%	50V
2419 ©	2020 552 94427	100pF	5%	50V
2420	4822 124 22651	1µF	20%	50V
2421 ©	2238 586 59812	100nF	10%	50V
2500	4822 124 21913	1µF	20%	63V
2519 ©	2238 586 59812	100nF	10%	50V

ELECTRICAL PARTSLIST POWER 2002 70W Class-D Combi Board

CAPACITORS

2520 ©	4822 126 13881	470pF	5%	50V	
2526	4822 124 21913	1µF	20%	63V	
2527 ©	2238 586 59812	100nF	10%	50V	
2528	4822 124 21913	1µF	20%	63V	
2529 ©	2238 586 59812	100nF	10%	50V	
2531 ©	4822 126 13881	470pF	5%	50V	
2532 ©	4822 122 33753	150pF	5%	50V	
2533 ©	2238 586 59812	100nF	10%	50V	
2534	4822 124 40769	4,7µF	20%	100V	
2535	4822 124 40769	4,7µF	20%	100V	
2536 ©	2238 586 59812	100nF	10%	50V	
2537	4822 124 22651	1µF	20%	50V	
2538 ©	3198 016 31020	1nF	5%	25V	
2539 ©	2238 586 59812	100nF	10%	50V	
2540	4822 124 22651	1µF	20%	50V	
2541	4822 124 81151	22µF	20%	50V	
2542 ©	3198 016 31020	1nF	5%	25V	
2546 ©	4822 126 14549	33nF	10%	16V	
2548	2020 308 90121	330nF	5%	50V	
2549	4822 121 43823	470nF	5%	50V	
2550 ©	5322 126 11579	3,3nF	10%	63V	
2551 ©	4822 126 13879	220nF	20%	16V	
2552 ©	4822 126 13193	4,7nF	10%	63V	
2553	4822 124 22651	1µF	20%	50V	
2554 ©	5322 126 11583	10nF	10%	63V	
2555	4822 124 81286	47µF	20%	16V	
2556	4822 124 22651	1µF	20%	50V	
2557	4822 124 21913	1µF	20%	63V	
2559	4822 124 21913	1µF	20%	63V	
2560 ©	4822 126 13881	470pF	5%	50V	
2561 ©	4822 126 13881	470pF	5%	50V	
2562 ©	4822 126 13881	470pF	5%	50V	
2563 ©	4822 126 13881	470pF	5%	50V	
2564 ©	4822 126 13881	470pF	5%	50V	
2565 ©	4822 126 13881	470pF	5%	50V	
2566 ©	4822 126 13881	470pF	5%	50V	
2567 ©	4822 126 13881	470pF	5%	50V	
2568	4822 124 12233	47µF	20%	25V	
2570 ©	2020 552 94427	100pF	5%	50V	
2571 ©	2020 552 94427	100pF	5%	50V	
2572 ©	4822 126 13879	220nF	20%	16V	
2573	4822 121 43823	470nF	5%	50V	
2574 ©	4822 126 13193	4,7nF	10%	63V	
2575	2020 308 90121	330nF	5%	50V	
2576 ©	3198 016 31020	1nF	5%	25V	
2577 ©	4822 126 14549	33nF	10%	16V	
2578 ©	5322 126 11579	3,3nF	10%	63V	
2580	4822 124 21732	10µF	20%	25V	
2581	4822 124 22652	2,2µF	20%	50V	
2582 ©	2238 586 59812	100nF	10%	50V	

RESISTORS

3100	4822 050 21003	10kΩ	2%	0,25W
3101 ©	2122 118 06192	68mΩ	1%	1W
3102 ©	4822 051 30472	4,7kΩ	5%	0,06W
3103 ©	4822 051 30471	470Ω	5%	0,06W
3106 ©	4822 051 30223	22kΩ	5%	0,06W
3107 ©	4822 051 30471	470Ω	5%	0,06W
3108 ©	4822 051 30472	4,7kΩ	5%	0,06W
3109 ©	4822 117 12139	22Ω	5%	0,06W
3110 ©	4822 117 13632	100kΩ	1%	0,06W
3112 ©	4822 117 12925	47kΩ	1%	0,06W
3113 ©	4822 051 30223	22kΩ	5%	0,06W
3114 ©	4822 051 30472	4,7kΩ	5%	0,06W
3115 ©	4822 051 30102	1kΩ	5%	0,06W

RESISTORS

3116 ©	4822 051 30474	470kΩ	5%	0,06W
3117 ©	4822 051 30222	2,2kΩ	5%	0,06W
3119 ©	4822 051 30392	3,9kΩ	5%	0,06W
3120 ©	4822 051 30392	3,9kΩ	5%	0,06W
3121 ©	4822 051 30392	3,9kΩ	5%	0,06W
3122 ©	4822 051 30392	3,9kΩ	5%	0,06W
3123	4822 053 11221	220Ω	5%	2W
3125 ©	4822 051 30102	1kΩ	5%	0,06W
3126 ©	4822 051 30103	10kΩ	5%	0,06W
3127 ©	4822 051 30102	1kΩ	5%	0,06W
3128 ©	4822 051 30103	10kΩ	5%	0,06W
3129 ©	4822 051 30471	470Ω	5%	0,06W
3130 ©	2122 118 06192	68mΩ	1%	1W
3133 ©	4822 117 12968	820Ω	5%	0,06W
3134 ©	4822 051 30471	470Ω	5%	0,06W
3135 ©	4822 117 12139	22Ω	5%	0,06W
3136 ©	4822 051 30103	10kΩ	5%	0,06W
3139	4822 050 11002	1kΩ	5%	0,2W
3140 ©	4822 051 30152	1,5kΩ	5%	0,06W
3141	4822 116 52186	22Ω	5%	0,5W
3142 ©	4822 051 30102	1kΩ	5%	0,06W
3143 ©	4822 051 30471	470Ω	5%	0,06W
3144 ©	4822 051 30184	180kΩ	5%	0,06W
3146 ©	4822 051 30102	1kΩ	5%	0,06W
3147 ©	4822 051 30332	3,3kΩ	5%	0,06W
3148 ©	4822 051 30183	18kΩ	5%	0,06W
3149 ©	4822 051 30472	4,7kΩ	5%	0,06W
3201 ©	4822 117 12925	47kΩ	1%	0,06W
3203 ©	4822 051 30223	22kΩ	5%	0,06W
3205 ©	2122 118 06192	68mΩ	1%	1W
3207 ©	4822 051 30474	470kΩ	5%	0,06W
3209 ©	4822 051 30471	470Ω	5%	0,06W
3210 ©	4822 051 30472	4,7kΩ	5%	0,06W
3211 ©	4822 051 30102	1kΩ	5%	0,06W
3213 ©	4822 051 30102	1kΩ	5%	0,06W
3215 ©	4822 117 12139	22Ω	5%	0,06W
3216 ©	4822 051 30223	22kΩ	5%	0,06W
3217 ©	4822 117 13632	100kΩ	1%	0,06W
3218 ©	4822 051 30472	4,7kΩ	5%	0,06W
3219 ©	4822 051 30183	18kΩ	5%	0,06W
3221 ©	4822 051 30102	1kΩ	5%	0,06W
3223 ©	4822 051 30334	330kΩ	5%	0,06W
3224 ©	4822 051 30682	6,8kΩ	5%	0,06W
3225 ©	4822 051 30222	2,2kΩ	5%	0,06W
3226 ©	4822 051 30683	68kΩ	5%	0,06W
3227 ©	4822 051 30332	3,3kΩ	5%	0,06W
3228 ©	4822 051 30392	3,9kΩ	5%	0,06W
3229 ©	4822 051 30103	10kΩ	5%	0,06W
3230	4822 116 52256	2,2kΩ	5%	0,16W
3232 ©	4822 051 30392	3,9kΩ	5%	0,06W
3238 ©	4822 051 30103	10kΩ	5%	0,06W
3239	4822 116 52186	22Ω	5%	0,5W
3241 ©	4822 051 30471	470Ω	5%	0,06W
3243 ©	2122 118 06192	68mΩ	1%	1W
3245 ©	4822 117 12968	820Ω	5%	0,06W
3246 ©	4822 051 30471	470Ω	5%	0,06W
3247 ©	4822 117 12139	22Ω	5%	0,06W
3248 ©	4822 051 30103	10kΩ	5%	0,06W
3251	4822 050 11002	1kΩ	5%	0,2W
3252 ©	4822 051 30152	1,5kΩ	5%	0,06W
3253 ©	4822 051 30102	1kΩ	5%	0,06W
3254 ©	4822 051 30184	180kΩ	5%	0,06W
3255 ©	4822 051 30471	470Ω	5%	0,06W
3256 ©	4822 051 30102	1kΩ	5%	0,06W
3258 ©	4822 051 30183	18kΩ	5%	0,06W

ELECTRICAL PARTSLIST POWER 2002 70W Class-D Combi Board

RESISTORS

3259 ©	4822 051 30472	4,7kΩ	5%	0,06W	
3261 ©	4822 051 30471	470Ω	5%	0,06W	
3262 ©	4822 051 30101	100Ω	5%	0,06W	
3263 ©	4822 051 30103	10kΩ	5%	0,06W	
3302 ©	4822 117 13632	100kΩ	1%	0,06W	
3303 ©	4822 051 30103	10kΩ	5%	0,06W	
3306	4822 101 11778	Potmeter 47kΩ		0,1W	
3307	4822 101 11778	Potmeter 47kΩ		0,1W	
3311 ©	4822 051 30101	100Ω	5%	0,06W	
3312 ©	4822 117 13632	100kΩ	1%	0,06W	
3313 ©	4822 051 30221	220Ω	5%	0,06W	
3314 ©	4822 117 12925	47kΩ	1%	0,06W	
3315	4822 050 11002	1kΩ	5%	0,2W	
3316 ©	4822 051 30273	27kΩ	5%	0,06W	
3318 ©	4822 117 13632	100kΩ	1%	0,06W	
3319 ©	4822 051 30222	2,2kΩ	5%	0,06W	
3320 ©	4822 051 30103	10kΩ	5%	0,06W	
3321 ©	4822 051 30102	1kΩ	5%	0,06W	
3322 ©	4822 051 30103	10kΩ	5%	0,06W	
3323 ©	4822 117 12968	820Ω	5%	0,06W	
3324 ©	4822 051 30105	1MΩ	5%	0,06W	
3325 ©	4822 051 30154	150kΩ	5%	0,06W	
3326 ©	4822 051 30154	150kΩ	5%	0,06W	
3327	4822 052 10339	33Ω	5%	NFR	
3328 ©	4822 051 30153	15kΩ	5%	0,06W	
3329	4822 116 52256	2,2kΩ	5%	0,16W	
3330 ©	4822 051 30103	10kΩ	5%	0,06W	
3331 ©	4822 051 30103	10kΩ	5%	0,06W	
3332 ©	4822 051 30332	3,3kΩ	5%	0,06W	
3334 ©	4822 051 30102	1kΩ	5%	0,06W	
3336 ©	4822 051 30183	18kΩ	5%	0,06W	
3337 ©	4822 051 30471	470Ω	5%	0,06W	
3338 ©	4822 051 30102	1kΩ	5%	0,06W	
3339 ©	4822 051 30222	2,2kΩ	5%	0,06W	
3340 ©	4822 051 30471	470Ω	5%	0,06W	
3341 ©	4822 051 30682	6,8kΩ	5%	0,06W	
3342 ©	4822 051 30121	120Ω	5%	0,06W	
3343 ©	4822 051 30151	150Ω	5%	0,06W	
3344 ©	4822 051 30471	470Ω	5%	0,06W	
3345 ©	4822 051 30471	470Ω	5%	0,06W	
3346 ©	4822 051 30479	47Ω	5%	0,06W	
3347 ©	4822 117 12925	47kΩ	1%	0,06W	
3400 ©	4822 051 30273	27kΩ	5%	0,06W	
3401 ©	4822 051 30471	470Ω	5%	0,06W	
3402 ©	4822 051 30332	3,3kΩ	5%	0,06W	
3403 ©	4822 051 30273	27kΩ	5%	0,06W	
3404 ©	4822 051 30682	6,8kΩ	5%	0,06W	
3405 ©	4822 051 30472	4,7kΩ	5%	0,06W	
3406	4822 052 10109	10Ω	5%	NFR	
3407 ©	4822 051 30472	4,7kΩ	5%	0,06W	
3408 ©	4822 051 30682	6,8kΩ	5%	0,06W	
3409 ©	4822 051 30273	27kΩ	5%	0,06W	
3410 ©	4822 051 30332	3,3kΩ	5%	0,06W	
3411	4822 116 52283	4,7kΩ	5%	0,5W	
3412	4822 052 10568	5,6Ω	5%	0,33W	
3413 ©	4822 051 30471	470Ω	5%	0,06W	
3415 ©	4822 051 30273	27kΩ	5%	0,06W	
3418 ©	4822 051 30471	470Ω	5%	0,06W	
3419 ©	4822 051 30222	2,2kΩ	5%	0,06W	
3420 ©	4822 051 30222	2,2kΩ	5%	0,06W	
3421 ©	4822 051 30222	2,2kΩ	5%	0,06W	
3422 ©	4822 051 30472	4,7kΩ	5%	0,06W	
3423 ©	4822 051 30103	10kΩ	5%	0,06W	
3424 ©	4822 051 30103	10kΩ	5%	0,06W	
3425 ©	2120 108 91909	39Ω	5%		

RESISTORS

3426 ©	2120 108 91909	39Ω	5%	
3427 ©	4822 051 30103	10kΩ	5%	0,06W
3428 ©	4822 051 30103	10kΩ	5%	0,06W
3429 ©	2120 108 91909	39Ω	5%	
3430 ©	2120 108 91909	39Ω	5%	
3431 ©	4822 051 30562	5,6kΩ	5%	0,06W
3432 ©	4822 051 30102	1kΩ	5%	0,06W
3433 ©	4822 051 30102	1kΩ	5%	0,06W
3434 ©	4822 051 30222	2,2kΩ	5%	0,06W
3435 ©	4822 051 30271	270Ω	5%	0,06W
3436 ©	4822 051 30472	4,7kΩ	5%	0,06W
3437 ©	4822 051 30562	5,6kΩ	5%	0,06W
3438 ©	4822 051 30103	10kΩ	5%	0,06W
3439 ©	4822 051 30103	10kΩ	5%	0,06W
3440	4822 116 81154	2,2Ω	5%	0,5W
3500 ©	4822 051 30152	1,5kΩ	5%	0,06W
3504 ©	4822 051 30103	10kΩ	5%	0,06W
3506 ©	4822 051 30471	470Ω	5%	0,06W
3507 ©	4822 051 30562	5,6kΩ	5%	0,06W
3514 ©	4822 051 30153	15kΩ	5%	0,06W
3515 ©	4822 051 30221	220Ω	5%	0,06W
3517 ©	4822 051 20399	39Ω	5%	0,1W
3518 ©	4822 051 30152	1,5kΩ	5%	0,06W
3519 ©	4822 051 30103	10kΩ	5%	0,06W
3520 ©	4822 051 30153	15kΩ	5%	0,06W
3521 ©	4822 051 30222	2,2kΩ	5%	0,06W
3522 ©	4822 051 30152	1,5kΩ	5%	0,06W
3523 ©	4822 051 30152	1,5kΩ	5%	0,06W
3524 ©	4822 117 11817	1,2kΩ	1%	0,06W
3525 ©	4822 051 30273	27kΩ	5%	0,06W
3526 ©	4822 051 30334	330kΩ	5%	0,06W
3527 ©	4822 051 30273	27kΩ	5%	0,06W
3528 ©	4822 051 30471	470Ω	5%	0,06W
3529 ©	4822 051 30154	150kΩ	5%	0,06W
3530 ©	4822 051 30561	560Ω	5%	0,06W
3531 ©	4822 051 30154	150kΩ	5%	0,06W
3532 ©	4822 117 12864	82kΩ	5%	0,06W
3533 ©	4822 051 30562	5,6kΩ	5%	0,06W
3534	4822 052 10109	10Ω	5%	NFR
3535 ©	4822 051 30562	5,6kΩ	5%	0,06W
3536 ©	4822 051 30223	22kΩ	5%	0,06W
3539 ©	4822 051 30153	15kΩ	5%	0,06W
3542 ©	4822 051 30123	12kΩ	5%	0,06W
3543 ©	4822 117 12902	8,2kΩ	1%	0,06W
3544 ©	4822 051 30562	5,6kΩ	5%	0,06W
3545 ©	4822 051 30393	39kΩ	5%	0,06W
3549 ©	4822 051 30101	100Ω	5%	0,06W
3550 ©	4822 051 30393	39kΩ	5%	0,06W
3551 ©	4822 051 30101	100Ω	5%	0,06W
3552 ©	4822 051 30101	100Ω	5%	0,06W
3553 ©	4822 051 30101	100Ω	5%	0,06W
3554 ©	4822 051 30101	100Ω	5%	0,06W
3555 ©	4822 051 30472	4,7kΩ	5%	0,06W
3556 ©	4822 051 30123	12kΩ	5%	0,06W
3557 ©	4822 051 30101	100Ω	5%	0,06W
3558 ©	4822 117 12903	1,8kΩ	1%	0,06W
3559 ©	4822 117 12903	1,8kΩ	1%	0,06W
3560 ©	4822 051 30101	100Ω	5%	0,06W
3561 ©	4822 051 30102	1kΩ	5%	0,06W
3562 ©	4822 051 30102	1kΩ	5%	0,06W
3563 ©	4822 051 30101	100Ω	5%	0,06W
3564 ©	4822 051 30101	100Ω	5%	0,06W
3566 ©	4822 051 30101	100Ω	5%	0,06W
3567 ©	4822 051 30102	1kΩ	5%	0,06W
3568 ©	4822 051 30101	100Ω	5%	0,06W

ELECTRICAL PARTSLIST POWER 2002 70W Class-D Combi Board

RESISTORS

3569 ©	4822 051 30102	1kΩ	5%	0,06W	
3570 ©	4822 117 13632	100kΩ	1%	0,06W	
3571 ©	4822 051 30223	22kΩ	5%	0,06W	
3572	4822 116 83883	470Ω	5%	0,16W	
3573	4822 116 83883	470Ω	5%	0,16W	
3574 ©	4822 051 30101	100Ω	5%	0,06W	
3575 ©	4822 051 30562	5,6kΩ	5%	0,06W	
3576 ©	4822 051 30123	12kΩ	5%	0,06W	
3577 ©	4822 051 30153	15kΩ	5%	0,06W	
3578 ©	4822 117 12902	8,2kΩ	1%	0,06W	
3579 ©	4822 051 30562	5,6kΩ	5%	0,06W	
3580 ©	4822 051 30472	4,7kΩ	5%	0,06W	
4211 ©	4822 051 20008	CHIP JUMPER 0805			
4212 ©	4822 051 20008	CHIP JUMPER 0805			
4213 ©	4822 051 30008	CHIP JUMPER 0603			
4214 ©	4822 051 20008	CHIP JUMPER 0805			
4215 ©	4822 051 30008	CHIP JUMPER 0603			
4216 ©	4822 051 30008	CHIP JUMPER 0603			
4221 ©	4822 051 30008	CHIP JUMPER 0603			
4223 ©	4822 051 30008	CHIP JUMPER 0603			
4226 ©	4822 051 30008	CHIP JUMPER 0603			
4230 ©	4822 051 30008	CHIP JUMPER 0603			
4232 ©	4822 051 30008	CHIP JUMPER 0603			
4233 ©	4822 051 30008	CHIP JUMPER 0603			
4235 ©	4822 051 30008	CHIP JUMPER 0603			
4240 ©	4822 051 20008	CHIP JUMPER 0805			
4241 ©	4822 051 20008	CHIP JUMPER 0805			
4242 ©	4822 051 30008	CHIP JUMPER 0603			
4243 ©	4822 051 30008	CHIP JUMPER 0603			
4245 ©	4822 051 30008	CHIP JUMPER 0603			
4253 ©	4822 051 30008	CHIP JUMPER 0603			
4260 ©	4822 051 30008	CHIP JUMPER 0603			
4265 ©	4822 051 30008	CHIP JUMPER 0603			
4272 ©	4822 051 30008	CHIP JUMPER 0603			
4273 ©	4822 051 30008	CHIP JUMPER 0603			
4274 ©	4822 051 30008	CHIP JUMPER 0603			
4275 ©	4822 051 30008	CHIP JUMPER 0603			
4276 ©	4822 051 30008	CHIP JUMPER 0603			
4277 ©	4822 051 30008	CHIP JUMPER 0603			
4279 ©	4822 051 30008	CHIP JUMPER 0603			
4281 ©	4822 051 30008	CHIP JUMPER 0603			
4301 ©	4822 051 30008	CHIP JUMPER 0603			
4501 ©	4822 051 30008	CHIP JUMPER 0603			

COILS

5100	4822 526 10494	FERRITE BEAD
5101	3103 308 30850	Output Filter
5102	2422 549 44944	Mains Filter 330µH 3A
5103	4822 526 10494	FERRITE BEAD
5104	4822 526 10494	FERRITE BEAD
5105	4822 157 11835	4,7µH
5201	3103 308 30850	Output Filter
5202	2422 549 44944	Mains Filter 330µH 3A
5203	4822 526 10494	FERRITE BEAD
5205	4822 157 70649	4,7µH
5300	2422 540 98542	Resonator 500kHz
5301	4822 526 10494	FERRITE BEAD
5302	2422 540 98561	Resonator 425kHz
5500 ©	4822 146 10663	TRANSFORMER 6RG (DC/DC)

DIODES

6104 ©	4822 130 11397	BAS316
6106 ©	4822 130 11416	PDZ6.8B
6107 ©	4822 130 11397	BAS316
6108 ©	4822 130 11416	PDZ6.8B
6109 ©	4822 130 11397	BAS316
6111 ©	4822 130 11397	BAS316
6202 ©	4822 130 11397	BAS316
6204 ©	4822 130 11397	BAS316
6205 ©	4822 130 11397	BAS316
6206 ©	4822 130 11397	BAS316
6207 ©	4822 130 11397	BAS316
6209 ©	4822 130 11148	UDZ-4,7B
6211 ©	4822 130 11397	BAS316
6212 ©	4822 130 11416	PDZ6.8B
6213 ©	4822 130 11416	PDZ6.8B
6214 ©	4822 130 11397	BAS316
6216	4822 130 30621	1N4148
6217 ©	4822 130 11397	BAS316
6300 ©	4822 130 10838	UDZ3.3B
6400 ©	4822 130 11148	UDZ-4,7B
6401	4822 130 30621	1N4148
6402	4822 130 30621	1N4148
6500	4822 130 61219	BZX79-C10
6501	4822 130 82714	BZX79-B2V7
6502 ©	4822 130 11397	BAS316
6503 ©	4822 130 11397	BAS316
6504 ©	4822 130 11397	BAS316
6505 ©	4822 130 11397	BAS316
6506 ©	9322 150 18685	BZX384-C47
6507 ©	9322 150 18685	BZX384-C47
6508 ©	3198 020 55680	BZX384-C5V6

TRANSISTORS

7104 ©	4822 130 60373	BC856B
7109	9322 173 29687	STP14NF12FP Power FET
7110 ©	9340 217 70115	BC847BW
7111 ©	3198 010 44350	BC807-25W
7112 ©	9340 218 50115	BC857BW
7113 ©	3198 010 44350	BC807-25W
7114 ©	4822 130 42804	BC817-25
7115 ©	4822 130 42804	BC817-25
7117 ©	9322 170 06685	2SC2713-GR
7119 ©	9322 170 06685	2SC2713-GR
7121	9322 173 29687	STP14NF12FP Power FET
7128 ©	4822 130 60373	BC856B
7129 ©	4822 130 60373	BC856B
7130 ©	5322 130 60159	BC846B
7131 ©	5322 130 60159	BC846B
7203 ©	9340 217 70115	BC847BW
7208 ©	4822 130 60373	BC856B
7210 ©	3198 010 44350	BC807-25W
7211 ©	9340 218 50115	BC857BW
7218	9322 173 29687	STP14NF12FP Power FET
7220 ©	9340 218 50115	BC857BW
7221 ©	3198 010 44350	BC807-25W
7222 ©	4822 130 42804	BC817-25
7223 ©	4822 130 42804	BC817-25
7227 ©	9322 170 06685	2SC2713-GR
7228 ©	9322 170 06685	2SC2713-GR
7231	9322 173 29687	STP14NF12FP Power FET
7238 ©	9340 217 70115	BC847BW
7239 ©	4822 130 60373	BC856B
7240 ©	4822 130 60373	BC856B

ELECTRICAL PARTSLIST POWER 2002 70W Class-D Combi Board

TRANSISTORS

7243	©	4822 130 42615	BC817-40
7309	©	9340 217 70115	BC847BW
7310	©	4822 130 42804	BC817-25
7316	©	9340 218 50115	BC857BW
7317	©	9340 217 70115	BC847BW
7319	©	9340 217 70115	BC847BW
7323	©	4822 130 42804	BC817-25
7324	©	4822 130 42804	BC817-25
7402		4822 130 40855	BC337-40
7403	©	4822 130 42804	BC817-25
7404	©	4822 130 42804	BC817-25
7405	©	9340 218 50115	BC857BW
7407	©	4822 130 42804	BC817-25
7408	©	4822 130 42804	BC817-25
7409	©	4822 130 42804	BC817-25
7410	©	9340 218 50115	BC857BW
7411	©	3198 010 44350	BC807-25W
7505	©	9340 217 70115	BC847BW
7506	©	4822 130 60373	BC856B
7509	©	9340 217 70115	BC847BW

INTEGRATED CIRCUITS

7105	©	9350 694 90118	74LV14D
7118	©	9350 694 90118	74LV14D
7122	©	5322 209 11517	PC74HCU04T, HEX INVERTER IC
7209	©	9350 694 90118	74LV14D
7232	©	5322 209 11517	PC74HCU04T, HEX INVERTER IC
7235	©	9350 694 90118	74LV14D
7312	©	5322 209 11517	PC74HCU04T, HEX INVERTER IC
7315		4822 209 81351	LM317MPTB
7320	©	4822 209 83357	NJM4560M
7321		4822 209 81351	LM317MPTB
7400	©	4822 209 31378	NJM4556M, 2-FOLD OP-AMP.
7406	©	4822 209 17345	M62320FP, I2C SHIFT REGISTER
7500	©	4822 209 17235	74LVU04D, 6-FOLD INVERTER
7508	©	9322 150 74668	TDA7468D, SOURCE SEL. & SOUND

ELECTRICAL PARTSLIST POWER 2002 70W Class-D Mains Board

MISCELLANEOUS

1201 ⚠	4822 071 51602	FUSE 1,6A	
1201 ⚠	4822 253 10126	FUSE T4A	
1203 ⚠	4822 071 55002	FUSE T5A	
1204 ⚠	2422 030 00328	MAINS SOCKET /37	
1204 ⚠	4822 265 31015	MAINS SOCKET, IEC	
1205 ⚠	4822 071 51602	FUSE 1,6A	
1206 ⚠	2422 129 16478	VOLTAGE SELECTOR	
1207 ⚠	9965 000 07788	FUSE RAD T2A	
1208 ⚠	2422 132 07519	RELAY 1P 12V 16A	
1209 ⚠	9965 000 07788	FUSE RAD T2A	
1210	4822 267 10953	FFC-CONNECTOR, 7P, TOP ENTRY	
1212 ⚠	4822 071 55002	FUSE T5A	
5001 ⚠	3103 308 30870	Mains Transformer /37	
5001 ⚠	3103 308 30880	Mains Transformer /22	
5001 ⚠	3103 308 30890	Mains Transformer /21, /21M	
5204 ⚠	2422 549 45157	TRAFO STANDBY	

CAPACITORS

2200	4822 121 43696	100nF	10%	100V
2201	4822 122 31125	4,7nF	10%	63V
2203	4822 121 43696	100nF	10%	100V
2204	4822 121 43696	100nF	10%	100V
2205	5322 124 41948	0,47µF	20%	50V
2208	2020 012 93547	100µF	20%	63V
2209	5322 121 42386	100nF	5%	63V
2210	5322 121 42386	100nF	5%	63V
2211	4822 124 42367	3300µF	20%	35V
2212	4822 124 12328	6800µF	20%	16V
2213	4822 124 40255	100µF	20%	50V
2214 ⚠	4822 121 10512	220nF	20%	275V
2215	2020 561 90365	100nF	20%	50V
2216	4822 124 21732	10µF	20%	25V
2217	4822 124 80144	220µF	20%	25V
2218	4822 121 41856	22nF	5%	250V
2219 ⚠	4822 126 14088	2,2nF	20%	250V
2220	4822 121 43526	47nF	5%	100V
2222 ⚠	4822 126 13589	470nF	10%	275V
2223	5322 121 42386	100nF	5%	63V
2224	4822 122 30043	10nF	80%	63V
2225	5322 121 42386	100nF	5%	63V
2226	5322 121 42386	100nF	5%	63V
2228 ©	4822 124 11946	22µF	20%	16V
2232	2022 020 00644	3300µF	20%	50V
2233	2022 020 00644	3300µF	20%	50V

RESISTORS

3200	4822 050 23303	33kΩ	1%	0,6W
3201 ⚠	4822 052 10478	4,7Ω	5%	NFR25
3202	4822 050 23303	33kΩ	1%	0,6W
3203	4822 116 52276	3,9kΩ	5%	0,5W
3204 ⚠	4822 053 21106	10MΩ	5%	0,5W
3205	4822 116 52228	680Ω	5%	0,5W
3206 ⚠	4822 053 21106	10MΩ	5%	0,5W
3207	4822 116 52283	4,7kΩ	5%	0,5W
3211	4822 116 52219	330Ω	5%	0,5W
3212	4822 111 30893	4,7MΩ	5%	0,2W
3213	4822 116 83883	470Ω	5%	0,16W
3215	4822 116 52175	100Ω	5%	0,5W
3217	4822 116 52256	2,2kΩ	5%	0,16W
3218	4822 050 21003	10kΩ	2%	0,25W
3219	4822 116 52234	100kΩ	5%	0,5W
3220	4822 116 52219	330Ω	5%	0,5W
3221	4822 116 52219	330Ω	5%	0,5W
3222	4822 116 52228	680Ω	5%	0,5W
3223	4822 116 52283	4,7kΩ	5%	0,5W

COILS

5202	4822 157 53473	1000µH
5203	4822 157 53473	1000µH
5220 ⚠	4822 157 11832	400µH Mains filter

DIODES

6200	4822 130 30621	1N4148
6201	4822 130 34382	BZX79-B8V2
6202	4822 130 11139	GBU8D
6204	4822 130 34142	BZX79-B33
6206	4822 130 31878	1N4003G
6207	4822 130 31878	1N4003G
6209	4822 130 31878	1N4003G
6210	4822 130 31878	1N4003G
6211	4822 130 30621	1N4148
6212	4822 130 30621	1N4148
6213	4822 130 31878	1N4003G
6215	4822 130 30621	1N4148
6216	4822 130 30621	1N4148
6217	4822 130 31878	1N4003G
6219	4822 130 30621	1N4148
6220	4822 130 31983	BAT85
6221	4822 130 31983	BAT85
6223	4822 130 34145	BZX79-B39
6224	5322 130 34563	BZX79-C2V7
6225	4822 130 31878	1N4003G
6226	4822 130 31878	1N4003G
6227	4822 130 31878	1N4003G
6228	4822 130 30621	1N4148
6229	4822 130 30621	1N4148

TRANSISTORS

7200	4822 130 40995	BD438
7203	4822 130 40995	BD438
7204	4822 130 44568	BC557B
7205	4822 130 40855	BC337-40
7206	4822 130 40959	BC547B

12-1

EXPLODED VIEW - MC-77

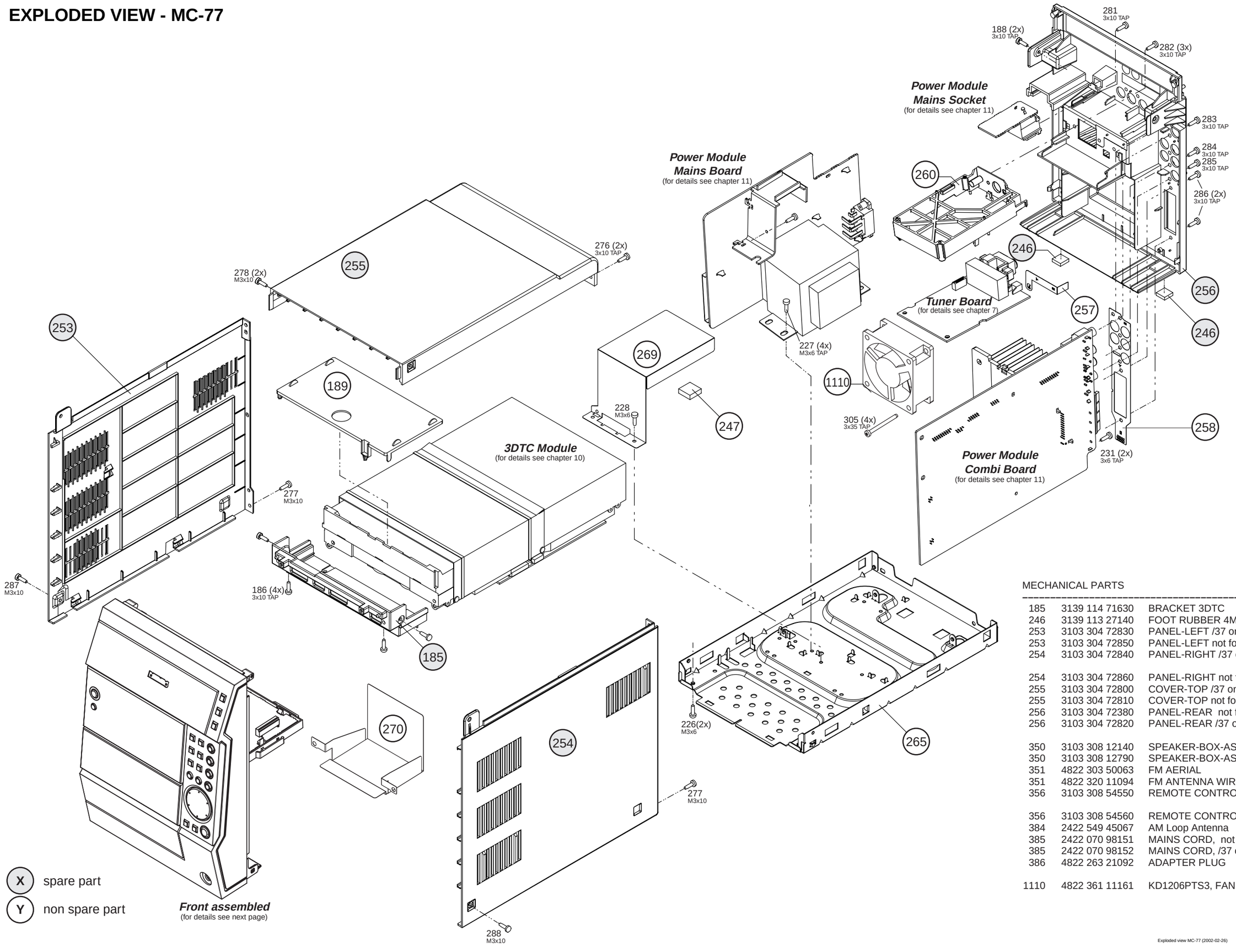

MECHANICAL PARTS

185	3139 114 71630	BRACKET 3DTC
246	3139 113 27140	FOOT RUBBER 4MM
253	3103 304 72830	PANEL-LEFT /37 only
253	3103 304 72850	PANEL-LEFT not for /37
254	3103 304 72840	PANEL-RIGHT /37 only
254	3103 304 72860	PANEL-RIGHT not for /37
255	3103 304 72800	COVER-TOP /37 only
255	3103 304 72810	COVER-TOP not for /37
256	3103 304 72380	PANEL-REAR not for /37
256	3103 304 72820	PANEL-REAR /37 only
350	3103 308 12140	SPEAKER-BOX-ASSY not for /37
350	3103 308 12790	SPEAKER-BOX-ASSY /37 only
351	4822 303 50063	FM AERIAL
351	4822 320 11094	FM ANTENNA WIRE /37
356	3103 308 54550	REMOTE CONTROL /22 only
356	3103 308 54560	REMOTE CONTROL not for /22
384	2422 549 45067	AM Loop Antenna
385	2422 070 98151	MAINS CORD, not for /37
385	2422 070 98152	MAINS CORD, /37 only
386	4822 263 21092	ADAPTER PLUG
1110	4822 361 11161	KD1206PTS3, FAN

12-2

EXPLODED VIEW - Front

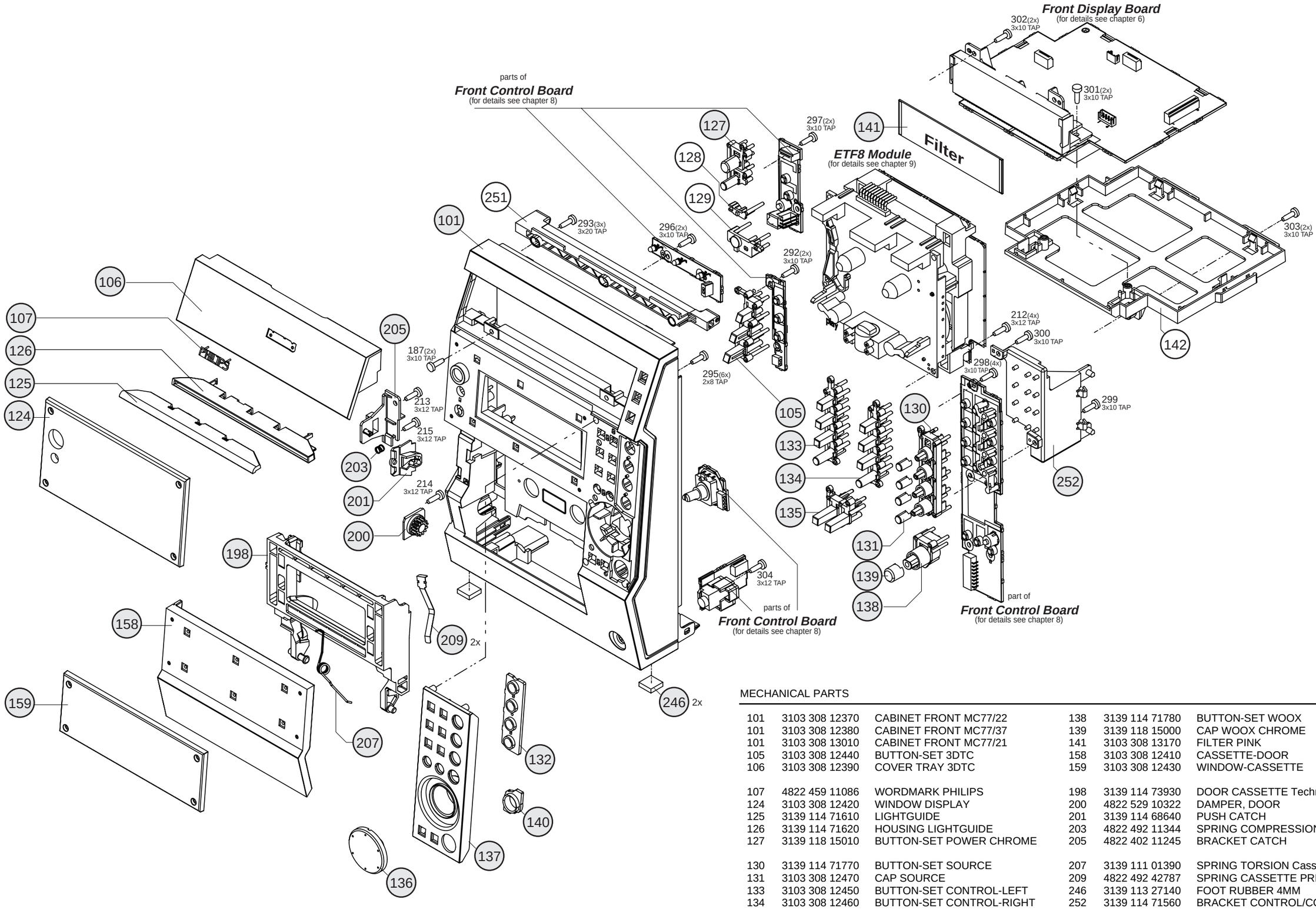

X spare part

Y non spare part

MECHANICAL PARTS

101	3103 308 12370	CABINET FRONT MC77/22	138	3139 114 71780	BUTTON-SET WOOX
101	3103 308 12380	CABINET FRONT MC77/37	139	3139 118 15000	CAP WOOX CHROME
101	3103 308 13010	CABINET FRONT MC77/21	141	3103 308 13170	FILTER PINK
105	3103 308 12440	BUTTON-SET 3DTC	158	3103 308 12410	CASSETTE-DOOR
106	3103 308 12390	COVER TRAY 3DTC	159	3103 308 12430	WINDOW-CASSETTE
107	4822 459 11086	WORDMARK PHILIPS	198	3139 114 73930	DOOR CASSETTE Technical part
124	3103 308 12420	WINDOW DISPLAY	200	4822 529 10322	DAMPER, DOOR
125	3139 114 71610	LIGHTGUIDE	201	3139 114 68640	PUSH CATCH
126	3139 114 71620	HOUSING LIGHTGUIDE	203	4822 492 11344	SPRING COMPRESSION
127	3139 118 15010	BUTTON-SET POWER CHROME	205	4822 402 11245	BRACKET CATCH
130	3139 114 71770	BUTTON-SET SOURCE	207	3139 111 01390	SPRING TORSION Cassette door
131	3103 308 12470	CAP SOURCE	209	4822 492 42787	SPRING CASSETTE PRESSURE
133	3103 308 12450	BUTTON-SET CONTROL-LEFT	246	3139 113 27140	FOOT RUBBER 4MM
134	3103 308 12460	BUTTON-SET CONTROL-RIGHT	252	3139 114 71560	BRACKET CONTROL/COMBI
135	3103 308 12490	BUTTON-SET TREBLE/BASS			
136	3139 118 14950	KNOB JOG CHROME			
137	3103 308 12400	CONTROL-PANEL			

MISCELLANEOUS

350	3103 308 12140	SPEAKER-BOX-ASSY not for /37
350	3103 308 12790	SPEAKER-BOX-ASSY for /37 only
351	4822 303 50063	FM AERIAL
351	4822 320 11094	FW ANTENNA WIRE /37
356	3103 308 54550	REMOTE CONTROL not for /37
356	3103 308 54560	REMOTE CONTROL for /37 only
384	2422 549 45067	AM Loop Antenna
385	2422 070 98151	MAINS CORD not for /37
385	2422 070 98152	MAINS CORD for /37 only
386	4822 263 21092	ADAPTER PLUG
1110	4822 361 11161	KD1206PTS3, FAN
1131	3139 110 35560	FFC-CABLE 19P 180mm AD FOLDED
1133	3139 110 35570	FFC-CABLE 9P 100mm AD
1134	3139 110 35240	FFC-CABLE 8P 280mm AD FOLDED
1135	4822 320 12752	FFC-CABLE 7P 180mm
1137	3139 110 35250	FFC-CABLE 4P 120mm AD
1138	3139 110 35520	FFC-CABLE 19P 100mm AD
1141	4822 320 12752	FFC-CABLE 7P 180mm
1142	3139 110 34610	FFC-CABLE 11P 180mm AD
1143	3139 110 34950	FFC-CABLE 7P 120mm AD
5001	3103 308 30870	Mains Transformer /37
5001	3103 308 30880	Mains Transformer /22
5001	3103 308 30890	Mains Transformer /21, /21M